2008 Guidebook of Requirements for Electric Service

The United Illuminating Company

TABLE OF CONTENTS

1. GENERAL INFORMATION

1.1 Introduction

This Guidebook provides a cursory view of the policies and procedures of UI and is intended for use by our customers, electrical contractors, consulting engineers, architects, and electrical inspectors. We present this Guidebook in an effort to acquaint you with the various types of electric services that are offered by UI and to help you determine which is best suited for your individual needs. This booklet mainly deals with low voltage services (480 volts and below). Primary service voltages above 480 volts are supplied by special contract and additional information is available on request. We at UI look forward to working with you to meet all your electrical energy and service requirements.

As a supplement to this Guidebook, you will find in *APPENDIX A*, a list of approved metering equipment including catalog numbers and other information.

1.2 Policies & Procedures

UI supplies electricity subject to our *"Terms and Conditions"* and our *"Rate Schedules"* on file with the Department of Public Utility Control (DPUC). While our policies and procedures follow accepted industry practices and standards, they are not necessarily the same as the requirements adopted by the other electric utilities that adjoin our territory. UI policies and procedures are available upon written request.

1.3 Safety

A. The safety of UI personnel and others that work on and/or around our equipment, as well as the safety of the general public, is our most important concern. Do not approach any downed or exposed wire, cable, or other equipment as any contact may cause injury or death. Please report any problems immediately to UI at 1-800-722-5584 (or 499-3333 if you are local to the New Haven exchange).

B. UI designs, builds, and operates its electric system in accordance with the applicable Connecticut General Statutes, Occupational Safety & Health Administration (OSHA) regulations, the National Electrical Safety Code (NESC), and to UI's own safety rules. Only authorized personnel are allowed to work on utility poles.

C. UI reserves the right to refuse to energize a new service or to de-energize an existing service that violates UI safety rules regardless of whether it meets electrical or building codes.

D. People working with equipment such as ladders, scaffolding, backhoes, dump trucks, cranes, etc. should use extreme caution when working near UI power lines. Contact with these lines may result in the electrification of you and/or your equipment and may cause injury or death. Please maintain a minimum of 10 feet from UI power lines. For additional information, please refer to OSHA regulations and contact UI at **1-800-722-5584** (or **499-3333** if you are local to the New Haven exchange).

E. People doing any excavation near buried power cables should use extreme caution. State law requires that you contact '*CALL BEFORE YOU DIG*' at **1-800-922-4455** a minimum of two full business days before starting any excavation.

1.4 Electrical Codes

A. UI designs, builds, and operates its electric system in accordance with the latest revision of the National Electrical Safety Code (NESC). The requirements of this code are incorporated in our Company Standards. For new construction and revamps, certain customer owned facilities fall under the jurisdiction of the NESC and must also comply with this code.

B. Customer owned facilities are built in accordance with the latest approved version of the National Electrical Code (NEC) and the latest versions of the Building and Fire Safety Codes that have been adopted by the State of Connecticut Department of

Public Safety. Approval by the authority having jurisdiction must be received by UI and posted in our system before any new or revamped electric service can be energized.

C. Where there is a conflict with the requirements of UI, the NESC, and the NEC, the more stringent requirements shall prevail. If necessary, UI and the authority having jurisdiction will jointly confer. UI reserves the right to make all final determinations.

1.5 Effective Date & Revisions

The effective date of this booklet is 09/01/2008 and supersedes all previous issues. All construction started on or after this date must comply with these requirements. Allowance will be made for projects currently in construction or service requests previously submitted to UI. UI reserves the right to change the requirements of the booklet without notification based on changes to our policies and procedures, terms and conditions, industry standards and codes, etc. When planning a project, it is your responsibility to verify the latest requirements of UI.

NOTE: Do not start any project without first consulting with UI and the Building Department of your municipality.

1.6 Consultation

It is impractical for a booklet of this type to contain all the information necessary to cover all variations and possibilities of service installation. Our Client Relations Center Representatives are available to assist you in determining the appropriate method of service for your needs. They will provide you with more detailed information regarding design, electrical requirements, rates, policies, etc. Our Client Relations Center acts as a clearinghouse for all customer requests. We urge you to contact them at your earliest convenience. We are confident that doing so will result in greater satisfaction and will avoid unnecessary delays.

Our Standard Field (Service) Department is responsible for coordinating all 200 amps and below, single phase, overhead services for residential customers where UI facilities are already in place. This includes temporary services to construction trailers that meet the above criteria. In addition, Standard Field is responsible for coordinating all service removals for building demolitions.

Our Customer Engineering Department is responsible for coordinating all services where additional poles and wires are needed, all residential overhead services over 200 amps, all underground residential services, and all commercial/industrial services.

Our Economic Development Department is available to assist you with the attraction, retention, and/or expansion of your business in our service territory. This includes coordinating contact with State and Municipal representatives, real estate developers, and financial institutions.

Our Energy Conservation Department offers technical assistance, consulting services and incentives at every phase of your construction or retrofit project encouraging the design, construction, and operation of energy efficient buildings and equipment. This assistance covers the major energy consuming systems such as lighting, heating ventilation and air conditioning equipment (HVAC), refrigeration equipment, motors, air compressors, process equipment, and building envelope.

Below is the phone and fax numbers for the listed Departments:

DEPARTMENT	PHONE #	FAX #
Client Relations Center	1-800-722-5584	1-888-442-6070
Customer Engineering	1-800-557-6602	(203) 926-4525
Standard Field	1-800-557-6603	(203) 499-3138
Economic Development	1-800-257-0141	(203) 499-3769
Energy Conservation	1-877-947-3873	(203) 499-3611

Refer to *Section 4 "Request for Electric Service"* for detailed information about applying for service or visit us on the Internet at our website at **www.uinet.com**.

2. GENERAL REQUIREMENTS FOR SERVICE

A. All requests for new service and increases to existing services must be ordered through our Client Relations Center either by phone, fax, or the Internet. Call **1-800-722-5584** (or **499-3333**) if you are local to the New Haven exchange) from 7:00 AM to 7:00 PM Monday – Friday and 7:00 AM to 4:00 PM on Saturday. You can fax your *Electric Service Information Form* to **1-888-442-6070** or apply on the Internet at **www.uinet.com** at any time. A UI job number will be assigned and this number is required to obtain a release from the authority having jurisdiction. NOTE: Any request for new service or increases to existing service jobs which have no action for one year will be canceled and the request process, if needed, will have to be repeated.

B. All service requests must include the name and address of the party that will be responsible for paying the electric bill. The Customer may be required to sign a Service Contract and, in some cases, make a deposit.

C. All service requests are subject to UI approval. This includes their service location, voltage and phase characteristics, outdoor meter location and configuration, and other associated requirements. NOTE: ALL new and revamped meters provisions MUST be located outdoors. Do not purchase any equipment or proceed with any construction until you have obtained these requirements from UI in writing. To avoid problems and delays, this should be done early in the project planning stages.

D. In general, service to a Customer's premises will be delivered at a single point. Where the capacity requirements to a single building or multiple buildings on a single parcel of land warrant additional service, both UI and the authority having jurisdiction must jointly grant approval. UI reserves the right to restrict the service to single point delivery or require additional payment for the cost to provide the additional service.

E. When requested by UI, customers, consultants, or contractors shall complete a UI Load Information Form. This form provides greater details about the project (including the total connected load in kilowatts) and should be submitted to the Customer Engineering Department. It augments and does not replace the service order placed through our Client Relations Center (see paragraph A above)..

F. The characteristics of certain electrical equipment such as motors and non-linear loads (e.g. variable speed drives and metal halide lighting are non-linear) may adversely affect your service and the operation of UI's electrical system. All adverse effects on UI's electrical system caused by customer equipment must be corrected by you at your expense. For additional information, please reference *Section 6 "MOTORS"* and *Section 9 "QUALITY OF SERVICE".*

G. The Company requires clear access to its facilities at all times and reserves the right to enter the Customer's property to inspect and/or maintain our equipment without notice. If access into a building is required, UI will make every attempt to do this during normal working hours or will make specific arrangements with the property owner.

H. When the estimated expenditures of the Company to provide service to a Customer's premises exceed the estimated income to be derived from that service, additional payments by the Customer may be required. The Company may require the Customer to pay, in advance, the estimated cost difference to provide such service or to guarantee a minimum annual payment for a term of years as stated in UI's Terms and Conditions (CPUCA No. 297 Item 26).

I. Customers shall consult the Company when contemplating changes in the size or electrical characteristics of their equipment. UI normally sizes its equipment to serve the actual electrical load of the Customer and not the full potential load of the Customer's service entrance equipment. UI must be notified of customer load increases in advance and be provided the opportunity to replace its equipment, if necessary, prior to the load increase. Damages to Company equipment resulting from unauthorized changes shall be the responsibility of the Customer.

J. All wiring must comply with the latest approved version of the National Electrical Code and latest versions of the Building and Fire Safety Codes that have been adopted by the State of Connecticut Department of Public Safety. **NOTE: UI will not schedule or energize any new or revamped service unless the release from the authority having jurisdiction is posted in our system.** The contractor should make arrangements with the proper authority in advance to avoid delays.

3. TYPES OF SERVICE AVAILABLE

3.1 Scope

UI supplies 60 hertz, alternating current with different voltage and ampere ratings. Not all voltage and ampere ratings are available throughout the entire service territory of UI. All services are either single-phase, three wire or three-phase, four wire and the neutral conductor must be grounded in accordance with the National Electrical Code. Please contact our Customer Engineering Department to verify that the requested service can be provided by UI prior to making any commitments or ordering any equipment.

A. Single-phase, three wire, 120/240 volt service is generally supplied to all residential customers and is typically available for all customers.

B. Single-phase, three wire, 120/208 volt service is only supplied when single phase metered service is required and a three phase 120/208Y volt source is available. Typically, this involves large apartment buildings, a condominium or an office complex, or service in the underground 'network' area.

C. Three-phase, four wire delta (120/240/240 volt) service may be supplied for Commercial and Industrial customers provided that the minimum connected three-phase load is 5 KW and the minimum total demand is 10 KW. For pole mounted transformers, the minimum service size is 100 amps and the maximum service size is 600 amps. This voltage is not available from padmount transformers.

D. Three-phase, four wire wye (120/208Y volt) service may be supplied for large residential projects and for Commercial and Industrial customers. For pole mounted transformers the minimum service size is 400 amps with a minimum demand of 30 KW. For padmount transformers, the minimum service size is 600 amps with a minimum demand of 65 KW.

E. Three-phase, four wire wye (277/480Y volt) service may be supplied for large Commercial and Industrial customers. For pole mounted and padmount transformers, the minimum service size is 400 amps with a minimum demand of 100 KW.

F. Three-phase, three wire delta (240 volt and 480 volt) service is no longer provided. For existing services with either of these voltages, please contact Customer Solution before planning any changes. Conversion to a three-phase, four wire service may be required.

G. Primary service voltages above 480 volts are supplied by special contract. Contact Customer Engineering for additional information.

Notes:

When three-phase service is supplied, every effort should be made to balance the load among all three phases.

Three-phase service is not generally supplied for residential use but may be furnished if loads warrant and facilities are available. UI's Customer Engineering Department shall be consulted prior to making commitments for any such service.

3.2 Single and Three-Phase Service from Pole Mounted Transformers

Maximum Service Size From Transformers Mounted On Poles

Volts	Main Switch Size and Equivalent KVA Ratings			Maximum Transformer Capacity Allowed on Poles (Note 1)	Size Main Allowed From			
					Street Pole		Off-Street Pole	
	400A	600A	800A		O.H.	U.G. By Cust. (Note 2)	O.H.	U.G. By Cust. (Note 2)
120/240 1ϕ 3 Wire	96 KVA	N/A	N/A	100 KVA	400A	400A	400A	400A
120/240/240 3ϕ 4 Wire (10 KW Min. Demand)	166 KVA	250 KVA	N/A	300 KVA	400A	400A	400A	400A 600A
240 3f 3 Wire	No longer available for new services. Contact UI's Customer Solution Department before making any additions or changes.							
120/208Y/ 3ϕ 4 Wire (30 KW Min. Demand)	144 KVA	216 KVA	288 KVA	300 KVA	400A	400A	400A	400A 600A 800A
277/480Y 3ϕ 4 Wire (100 KW Min. Demand)	332 KVA	N/A	N/A	300 KVA	(Note 3)	(Note 3)	400A	400A

Note: 1) 3ϕ 3 wire ungrounded services (240V or 480V), are no longer available. Contact UI's Customer Engineering Department before making any additions or changes to existing services.

2) Conduit shall be no smaller than 1¼" nor larger than 4" in diameter. Location on the riser pole shall be designated by UI and is typically on the field side of the pole away from traffic. Do not trench to any pole without first obtaining approval from UI. A maximum of 2 conduits per pole is allowed for electric service. All riser pole conduits and sweeps to be rigid galvanized steel conduit and supported 3" clear of the pole. Install only the first vertical 10' length and provide the remaining conduit, brackets, weatherhead, and grounding clamp for installation by UI. Service entrance conductors are supplied by the Customer and must extend a minimum of 3 feet beyond the weatherhead to allow for a drip loop. Do not install conductors without UI assistance.

3) 277/480Y services are not available from street poles (private property poles are required).

3.3 Single and Three-Phase Service from Padmount Transformers

A. The design, location, voltages, and materials for these underground services must be approved by UI prior to making any commitments. Design information can be found in UI's Distribution Construction Standards. Please contact UI's Customer Engineering Department for more information.

B. The Company has a residential policy, (OP-D36) which in general states that the developer must provide all trench¬ing required for the electrical system. Also, the developer must supply and install foundations and conduit to UI specifications. UI will then install the primary and secondary electric system. Typically, a permanent easement is required. The Customer for each individual lot will supply, install, own and maintain the service entrance cables and conduit. Voltages available are 120/240 volt single-phase and 120/208Y volt three-phase for large multi-unit housing. Contact UI's Customer Engineering Department.

C. The Company has a commercial/industrial policy (OP-D32) governing service to office or industrial parks. Basically, the developer must provide all trench¬ing required for the electrical system. Also, the developer must supply and install foundations and conduit to UI specifications. UI will then install the electric system necessary to supply the individual lots. Typically, a permanent easement is required. The services to the individual lots are usually installed under separate contracts. See paragraph D below. Contact UI's Customer Engineering Department.

D. For service to an individual commercial/industrial lot, the Customer must supply, install, own and maintain all primary conduit, transformer foundations, and the service entrance conduit and cables. The primary conduit shall be installed from the high voltage supply designated by UI to the transformer foundation per UI specifications. UI will install the primary cable and transformer and make all connections to Company owned equipment. Voltages available are single-phase, three wire 120/240 volt (800 amp max.) and three-phase, four wire 120/208Y (3000 amp max.) or 277/480Y (2500 amp max.). Contact UI's Customer Engineering Department.

3.4 Services from Transformer Vaults

A. The design, location, voltages and materials for these underground services must be approved by the Company prior to making any commitments. Contact UI's Customer Engineering Department.

B. For downtown New Haven or Bridgeport, the Company has a policy (OP-D10N) for service from the network grid. In general, services up to and including 800 amps at 120/208Y volts will be connected to the grid. The Customer must pay for that portion of the service between the main switch or junction box and the curb. Services exceeding 800 amps in total capacity at 120/208Y and all services rated 277/480Y can not be connected directly to the network grid. In this case, the Customer is required to install, own, and maintain a vault to UI specifications. Voltages available are three-phase, four wire 120/208Y or 277/480Y, and are limited to 3000 Amps. (Refer to Guidebook Standards #8 and 9 in Section 12).

Note: *Other Municipalities have underground systems in portions of their downtown area (e.g. East Haven and Derby). Contact UI's Customer Engineering Department for specific requirements for service in these areas.*

C. With the exception of single meter installations, the underground service conduit shall terminate in a junction or pull box supplied and installed by the Customer. The junction or pull box shall meet both UI and National Electrical Code requirements and is subject to the approval of the authority having jurisdiction. The junction box will connect to the customer's main switch or switches. The minimum size box shall be based on the service size and the conduit shall enter from the back or the end of the box. The service conductors shall not be spliced but may be tapped where multiple main switches are used. The junction or pull box shall have provisions for Company locks and seals. Contact UI's Customer Engineering Department for drawings of approved junction boxes.

D. In each of the above cases, the service entrance disconnect must be either a switch with current limiting fuses or a circuit breaker of equivalent interrupting capacity. The short circuit capacity of these devices shall be not less than 200,000 amps symmetrical, for downtown network areas and the service must be configured in cold sequence (i.e. switch-fuse-meter). For all other areas contact UI's Customer Engineering Department.

E. Customers in non-network areas may be required install, own, and maintain a transformer vault to UI specifications. In general, this occurs when the service entrance capacity requires the installation of transformers on the Customer's property and there is not sufficient area for a padmount transformer. Voltages available are three-phase, four wire 120/208Y (3000 amp max.) or 277/480Y (2000 amp max.). The short circuit capacity of these devices shall be calculated by UI and the service must be configured in cold sequence (i.e. switch-fuse-meter). Contact UI's Customer Engineering Department.

3.5 Temporary Service

A. Temporary service is available upon request provided that the cost to install and remove the necessary facilities is paid in full and in advance by the Customer.

B. Where UI facilities are already in place a single phase temporary service can be supplied by a simple service drop or underground service lateral, a standard flat rate fee applies.

C. For more complex temporary services, which include three phase power, the Customer Engineering Department will provide the Customer with a written estimate of the cost associated with providing such service.

D. Services that utilize temporary conductors connected to the load side of the meter provision must be applied for as a temporary service even if the permanent conductors are installed on the line side of the meter. This is billable at the current rate.

3.6 Primary Voltage Services

Primary voltage services are generally supplied by high voltage switchgear (either fused interrupters or circuit breakers) and are primary metered. Contact UI's Customer Engineering Department for additional information.*

4. REQUEST FOR ELECTRIC SERVICE

To establish an electric service, temporary or permanent, contact UI's Client Relations Center by calling: **1-800-722-5584** (7:00 a.m. – 7:00 p.m., Monday – Friday and 7:00 AM to 4:00 PM on Saturday) or **499-3333** if you are local to the New Haven exchange. You may fax a completed Electric Service Information Form to: **1-888-442-6070** (available 24 hours / 7 days per week). You may also apply by completing an application on our website at **www.uinet.com**. Please request a service order and a meter application.

Note: *Before UI can schedule or energize any new or revamped service, the authority having jurisdiction must approve the construction and the acceptance of such construction must be posted in UI's system.*

4.1 General Service Information

The following general service information is required on all applications:

A. Project/Owner Name

B. Number & Street address, Town, & Zip Code

C. Lot # (if applicable) and nearest intersecting street

D. Complete billing information including:

- Owner's billing address and telephone number
- Total number of meters requested

E Electrical Contractor's license number (E1 / E9)

F. Electrical Contractor's telephone, pager, and fax numbers

G. Service information including:

- Residential or Commercial / Industrial
- Overhead or Underground

Service size in amps

Requested service voltage

Single-phase (3 wire) or three-phase (4 wire)

Temporary or permanent

H. Type of construction (new, replacement, increase, removal, demolition)

I. Dates temporary and permanent service is required

4.2 Residential Overhead Service Drops

For single-phase residential overhead service drops rated 200 amperes and below, the following additional information is required by UI:

A. Pole number of requested service pole

B. Confirmation if the requested service pole has UI secondary conductors (yes/no)

C. Number of pole spans from transformer to service pole

D. Span distance (in feet) from service pole to service location

Where UI facilities are already in place, residential overhead service drops are typically designed and located by your licensed electrical contractor. This includes temporary services to construction trailers that meet the above criteria (the standard flat rate fee for temporary service applies). Upon receiving complete information from you, UI will provide a UI Job Number immediately from our Client Relations Representative or by the next business day if you faxed in your request. If you have requested UI to “spot the service”, then typically you will be contacted within 5 business days by the Standard Field Department.

(Refer to *Guidebook Standards # 1, 2, 3, 4, 10 and 12 in Section 12*).

4.3 All Other Service Drops & Laterals

The following are requirements for all other overhead service drops and underground service laterals, services where additional poles and wires are needed, all residential overhead services over 200 amps, all underground residential services, and all commercial/industrial services:

A. One complete set of an approved A2 survey plot plan showing topography, wetlands (if any), proposed location of other utilities, drainage, property boundaries, roads, sidewalks, driveways, location of buildings, and desired service location. Street and property lines must be clearly and accurately marked at the project site.

B. A completed UI electrical load information form.

C. Construction start and completion dates.

You will not receive the UI Job Number until your request has been reviewed and the job requirements determined by our Customer Engineering Department. Typically, you will be contacted by our Engineer to discuss the job and/or arrange for a job site meeting within 5 business days of placing the order. The job requirements will be written by our Engineer and sent to you with a copy of the Service Order by fax or by US mail.

(Refer to *Guidebook Standards # 5, 6, 7, 8, 9, 11, and 13 in Section 12*).

4.4 Residential Developments

Overhead line extensions and Underground Residential Distribution (URD) projects require additional information, drawings, and advance planning. Therefore, it is important that our Customer Engineering Department obtain the following information:

A. One complete set of an approved A2 survey plot plan showing topography, wetlands (if any), proposed location of other utilities, drainage, property boundaries, roads, sidewalks, driveways, location of buildings, and desired service location. Street and property lines must be clearly and accurately marked at the project site.

B. Name of real property owner and the approximate date property was purchased (obtain volume number, page number, and date recorded, if available).

C. Sizes (sq. ft.) and number of buildings, including the number of units per building and any house meters, if applicable. If this represents only a portion or section of the total development, indicate the total number of future buildings and units planned for the development.

D. A completed UI electrical load information for a typical unit.

E. Construction start and completion dates.

UI needs six to eight weeks after receipt of complete information to prepare the necessary project documents and cannot install or energize any facilities until the necessary contracts are signed and all applicable easements have been recorded on the land records. These documents include:

1. 'As-Planned' Engineering drawing with proposed UI facilities.
2. 'As-Planned' Easement drawing with proposed easement strip.
3. Responsibility Agreement / URD Contract.

4.5 Commercial & Industrial Developments

Commercial and Industrial developments supplied by overhead power lines or underground cable systems require additional information, drawings, and advance planning. Therefore, it is important that our Customer Engineering Department obtain the following information:

A. One complete set of an approved A2 survey plot plan showing topography, wetlands (if any), proposed location of other utilities, drainage, property boundaries, roads, sidewalks, driveways, location of buildings, and desired service location. Street and property lines must be clearly and accurately marked at the project site.

B. One complete set of the electrical series drawings, including the power riser or 1-line diagram for the service(s). Any other drawings that detail trenching and conduit placement, transformer foundations, or other items relating to the service from UI's facilities to the Customer's service entrance equipment.

C. Name of real property owner and the approximate date property was purchased (obtain volume number, page number, and date recorded, if available).

D. Sizes (sq. ft.) and number of buildings, including the number of units per building and any house meters, if applicable. If this represents only a portion or section of the total development, indicate the total number of future buildings and units planned for the development.

E. A completed UI electrical load information for each service.

F. Construction start and completion dates.

UI needs six to eight weeks after receipt of complete information to prepare the necessary project documents and can not install or energize any facilities until the necessary contracts are signed and all applicable easements have been recorded on the land records. These documents include:

1. 'As-Planned' Engineering drawing with proposed UI facilities.
2. 'As-Planned' Easement drawing with proposed easement strip.
3. Responsibility Agreement / OP-D32 Contract.

4.6 Service Request Do's and Don'ts

REMEMBER:

Do: Contact UI's Client Relations Center to apply for electric service and provide complete and accurate information. Please allow sufficient time for UI to review your request, order necessary materials, and schedule the required work.

Label meter provisions and main switches with the same identifying mark as the unit the meter serves.

Have the authority having jurisdiction inspect and release the service (new or revamp) and notify UI of such release.

Install meter provisions outside.

Don't: Install electric service without first applying for service and obtaining the job requirements and a job number from UI.

Excavate underground facilities before contacting *"Call Before You Dig"* at **1-800-922-4455**.

Install meter provisions indoors.

Install service conduits to poles until such poles have been approved by UI and the location of the conduit has been clearly marked on the pole.

Install more than one 10 foot vertical section of conduit or any service entrance conductors in conduits to poles, padmount transformers, or hand hole without coordinating the installation with UI.

5.1 Overhead and Underground Services

A. Overhead Service Drops

1. Overhead service drops are installed, owned, and maintained by the Company. The point of attachment on the Customer's premises will be designated and/or approved by the Company and shall be the shortest practical distance from the Company's pole. Service bolts will be supplied by the Company (see the inside back cover to find the locations where service bolts are available) and installed by the Customer. The bolt shall be adequately anchored at the point of attachment to safely withstand the strain imposed by the service drop. The contractor should install the bolt into brick, concrete block, or masonry construction when available.
2. The point of attachment shall be safely accessible by UI crews from a ladder on level ground and the height above finished grade shall not be less than 12 feet nor more than 26 feet. The point of attachment shall also be such that the following minimum conductor clearances are maintained:
   a. 15 ft. above lawns and residential driveways.
   b. 18 ft. above streets, commercial driveways and parking lots.
   c. 8 ft. above roofs.

Note: *If the height of a structure is not adequate to maintain these clearances, a service mast may be necessary. (Refer to Guidebook Standards #1, 2, 3, & 4 in Section 12).*

3. The point of attachment shall be designated such that UI's service drop is not readily accessible as defined by the National Electrical Code and that adequate horizontal and vertical clearances can be maintained. In no case shall UI provide, own or maintain a service drop that runs horizontally along the surface of a building.
4. Service entrance conductors provided by the Customer shall conform to the National Electrical Code and local authorities and shall be properly identified.

5. A maximum of 2 service masts with a total of 6 wires for single-phase or 8 wires for three-phase can be connected to a single service drop.

   Contact UI's Standard Field Department regarding 200 amp class, single-phase, overhead, residential and temporary service drops.

B. Underground Service Laterals

1. Underground service laterals (both the conduit and the service entrance conductors) are owned and maintained by the Customer from the service entrance equipment to the designated point of attachment to UI facilities.
2. Trenching for underground laterals from wood poles shall not start until the service location is approved and the conduit location is marked at the pole by UI. A maximum of 2 risers for the electric service can be installed on the pole and a maximum of 3 wires for single phase and 4 wires for three phase can be installed in each conduit. While allowed by the NEC, UI does not allow doubled conductors in a single riser conduit. The contractor installs only the first 10' vertical length of conduit and one stand-off bracket (a minimum of 8' above final grade). The additional conduit, stand-off brackets, weather head and UL listed conduit grounding clamp or ground lug kit on the weather head are provided by the Customer and installed by UI. The riser conduit and elbow at the pole must be rigid galvanized steel. To facilitate the installation of the wires, UI recommends that the elbow at the pole be larger than the minimum allowable radius for the trade diameter of the conduit being installed.
3. Conduit from the service entrance equipment back to the property line can be either rigid galvanized steel or PVC subject to the requirements of the NEC and the authority having jurisdiction. Conduit in the street right-of-way (curb to property line) must be rigid galvanized steel.
4. For underground services from single-phase padmount transformers or secondary hand holes, the contractor must locate and extend the PVC conduit stub at the UI point of service connection. If no stub is available, contact UI's Customer Engineering Department for assistance. Do not attempt to install any conduit or cable into the transformer or hand hole without contacting UI.
5. Direct buried services must extend in rigid galvanized steel conduit from the pole onto private property or extend 5 feet in Schedule 40 PVC conduit from the single-phase padmount transformer or hand hole. The conduit at the service entrance

must extend perpendicularly away from the building foundation wall a minimum of 5 feet. NOTE: UI does not recommend the installation of direct buried services.

6. Service entrance conductors from poles, padmount transformers or hand holes must be continuous to the meter location. Pull boxes or tap boxes are prohibited except when located next to and installed as part of the service entrance equipment.
7. Protection from ground movement for underground service entrance conductors shall be provided by the installation of a UL listed slip fitting at all meter provisions. The slip joint shall be the appropriate match to the trade diameter of the service conduit and be securely fastened to the building with a minimum of two clamps. Refer to *Guidebook Standard #13 in Section 12.*
8. Our Standard Field Department will schedule the installation and connection of your underground service entrance conductors. You will be contacted after the authority having jurisdiction has inspected the service and the release is posted in our system.

5.2 Road Crossing Poles

The Company will make every effort to treat all customers equally, no matter which side of the street they reside on. UI will therefore install road crossing poles as follows:

A. The Company will install overhead secondary service from a pole on the street provided the span does not exceed 150 ft. (100 ft. for 400 amp services). If the pole is on the opposite side of the street and the service would be within the 150 ft. limitation if the pole was on the other side, then a road crossing pole will be set at no cost. If additional poles beyond the road crossing pole are required to reach the building, they will be installed by the Company on a billable basis and are covered under UI's Private Line Pole Policy. (Refer to *Section 5.3* below and to *Guidebook Standard #5 in Section 12*).

B. If the Customer elects to install an underground service, UI will install a road crossing pole at no charge to save the Customer the cost of trenching across the street. If the Customer elects not to have the pole installed, no credit for said pole would be granted by UI. (Refer to *Guidebook Standard #6 in Section 12*).

C. The Company will install one section of wire, at no charge, from a street pole on the Customer's side of the street. If the street pole line is located on the opposite site of the street, the Company will install a pole on the Customer's side of the street, if necessary, and the previously mentioned section of wire will be installed from that pole at no charge. (Refer to *Guidebook Standard #7 in Section 12*).

5.3 Private Line Poles (PLP)

A. Where off-street overhead facilities for a single Customer are required, all facilities beyond the standard 150' span of overhead wire are billable to the Customer. The Company will install, own, and maintain the overhead facilities. The property owner must sign a Private Property Permit or permanent easement. Future changes to or relocations of these facilities requested by the Customer are also billable.

B. Where off-street overhead facilities for multiple Customers are required, the company will install, own, and maintain the overhead facilities. These facilities will be installed at no cost to the Customers. A permanent easement must be granted to UI by the property owner(s). Future changes to or relocations of these facilities requested by the Customer are billable.

C. When Company owned poles are installed on private property, permanent truck access to all poles must be provided and maintained by the property owner.

5.4 Cut & Reconnect Policy

Policy Description:

The United Illuminating Company (the "Company") will permit electrical contractors and electricians (herein jointly called "electricians"), licensed by the State of Connecticut, to cut and reconnect residential services at the weather head in order to expedite work requested by customers. Failure to follow the steps contained within the procedure of this policy may result in additional corrective work and expense for the electrician. The electrician will be billed for any corrective work performed by the Company. Unauthorized connections to the Company's service conductors will be treated as tampering and may result in criminal prosecution. The electrician shall be responsible for obtaining the appropriate permits from the local municipal authority.

Homeowners are not authorized to cut and reconnect electric services. Homeowners can only install de-energized or dead services. To participate in the program, an electrician must hold:

An E-1 or E9 license issued by the Connecticut Electrical Work Examining Board; or:

Work in the capacity of an E-2 Journeyman or Electrical Apprentice under the employment of an E-1 licensee. Under this condition, physical work may be performed; however, the ***permit must be obtained by the licensee*** who is responsible for the work at the location.

The electrician, its employees and those under its control shall perform all work as independent contractors, and shall not be deemed to be employees or agents of United Illuminating for any purpose whatsoever. UI shall not be liable for direct, indirect or consequential damages of any kind, whether resulting from injuries to persons or property or otherwise arising out of the electricians work.

Scope of Work:

Services allowed to be cut and reconnected must meet the following criteria:

Single phase, overhead service drop, 200 amp class (maximum) with voltages of 120V line to ground.

UI requires permanent connections which will be inspected by UI in order to reduce customer damage due to poor connections.

Procedure:

The electrician shall perform the following:

1. Contact the Company at **1-800-722-5584** prior to starting work to avoid possible code violations or non-compliance of Company requirements. A service location request can also be submitted on-line at **www.uinet.com**. Note in the remarks section *"This Work Involves Cut and Reconnect."* The work must be completed within 15 days from the required service date.
2. Cut the drip loop at the house, on the line side, immediately adjacent to the Company's existing connectors.
3. Replace/repair the service entrance/meter box up to the first disconnecting device.

4. Connect the replaced or repaired service entrance/meter box to the live ends of the Company's service drop using properly sized connector types as outlined below:

   Phase/hot leg—Insulated Compression Sleeves

   Neutral—Parallel Groove Connectors or Bare Compression Sleeves

   Connectors must be approved for use with the type (copper/ aluminum) of conductors being installed.

   Note: Split bolt and taped connectors are ***not*** acceptable for permanent connections.

5. Install approved rated jumpers and optically clear meter socket cover(s) to avoid damage to the meter socket, ensure public safety and provide access for visual inspection. Covers and service bolts are available through the local building official's office, or from UI. Jumpers may be obtained at UI's Electric Systems Work Center located at 801 Bridgeport Avenue in Shelton and at UI's Standard Field Office located at 1 Waterfront Street in New Haven.
6. Leave the old meter in close proximity to the new meter socket. In ***no*** case shall the electric meter be reinstalled.
7. Be responsible for obtaining municipal inspection/approval and shall advise the Company within one business day of completing Steps 1-6 above.
8. UI shall ensure that the installation meets Company requirements and install the necessary meters.

Violations:

In any instance of deviation from the above procedure, United Illuminating shall do the following:

1. Send written notification to the electrician and the municipal authority describing the specific violation of this policy. This notification will serve as a warning.
2. Bill the electrician for costs incurred by the Company due to the violation.
3. Notify the appropriate municipal and state authorities after multiple warning letters have been issued. This constitutes a violation letter.
4. Suspend your privilege to participate in the Residential Overhead Service Policy which includes the Cut and Reconnect Policy.

5. The Trade Practice Division of the Department of Consumer Protection of the State of Connecticut will review complaints to determine if Connecticut General Statute Section 20-334 has been violated, and take appropriate action, up to and including penalties, as described in the Connecticut General Statute Section 20-341.

5.5 Demolition

A. To terminate UI service to any building or structure designated for demolition, a notarized letter from the property owner or the owner's assigned representative must be received by UI. For condemnations, eminent domain proceedings, etc., a letter from the municipality is acceptable. Please send the letter to:

United Illuminating
Standard Field - WIP Clerk (MS-10B)
P.O. Box 1564
New Haven, CT 06506-9954

B. The letter must list the legal address of the property as determined by the tax records and the front of the building must be clearly marked with this number in orange paint.

C. UI personnel must have access to the premise for verification of the service disconnect and for removal of UI equipment. If the building structure is unsafe for entry or UI cannot gain access to the premise, then the building owner is responsible for verifying that the service to the building has been disconnected before proceeding with the demolition.

D. When completed, UI will prepare a letter stating that all of its facilities have been removed from said property. The letter will be sent to the originator of the request and to the appropriate municipal authority. Any special conditions such as UI's inability to gain access to the structure will be so noted in this letter. Contact UI's Standard Solution Department.

5.6 Service to PCS Towers

A. Where personal communication system (PCS) towers, antennas, or other similar systems are installed on leased property, a PCS Agreement must be signed by both the tower owner and the land owner. Before planning any service, please contact UI's Customer Solution (Engineering) Department.

B. For stand-alone towers, new electric service will be administered according to the applicable UI policies and procedures which may include billable charges. The initial service installed must have sufficient electrical capacity (including meter provisions) to supply the maximum number of carriers for which the tower is designed.

C. Where the construction of the proposed service will not comply with UI Standards and/or access to the electric facilities is restricted, UI may require a primary voltage service with a single primary meter. All facilities beyond the primary meter are to be installed, owned, and maintained by the Customer.

D. For service additions to stand-alone towers, UI prefers one service entrance with one meter location. Where it is impractical to combine the new service with the existing service, UI will allow a second meter location provided both services originate from the same UI source, a placard of the service locations is posted at each entry gate, and it is approved by the authority having jurisdiction.

E. For towers or antennas attached to existing buildings or other structures, the preferred method of service is to utilize the existing service. This may involve a service increase and/or a reconfiguration of the existing metering. A separate service to the building (including line side taps in the service entrance equipment) is not permitted unless granted in writing by UI and approved by the authority having jurisdiction. (Refer to *UI Guidebook Section 2 paragraph D*).

F. When submitting application for service, the following is required:

   1. A copy of the Lease Property Agreement between the Land Owner and the Tower Owner.
   2. An A2 survey plot showing the property lines.
   3. A complete UI load Information Form.

6. MOTORS

6.1 General Requirements

If a motor is connected to a secondary system that also supplies other UI customers, the following conditions must be met in order to minimize voltage flicker and other disturbances caused by the starting currents. The starting current of a motor is assumed to be the locked rotor current stated on the nameplate or obtained from the manufacturer's coding or test data.

A. When two or more motors start simultaneously, the sum of all their horsepower ratings shall be totaled. The maximum allowable total starting current shall not exceed the value listed for the total of the horsepower rating of all motors that are started simultaneously.

B. If the locked rotor current of any motor exceeds the allowable starting current listed in section 6.3 or 6.4, then the motor shall not be started across the line. The Customer must furnish, install, own, and maintain a reduced voltage starter or other device to bring the starting current within the allowable value.

C. Motors should be rated for use at the service voltage provided by UI and you should verify your service voltage prior to buying any equipment. The nominal service voltages available are 120, 208, and 240 volts single-phase and 208, 240, and 480 volts three-phase. Motors rated at 220, 230, 440, or 460 volts may not operate satisfactorily.

6.2 Protective Devices

A. UI strongly recommends that all motors be controlled and protected from damage that can occur by operation under abnormal conditions. These conditions include single phasing, under voltage, phase reversals, voltage transients and other operating hazards. Unless caused by negligence by UI personnel, the Company is not responsible for equipment and/or collateral damage due to abnormal conditions. Customers are advised to install adequate protection on all motors. Protective equipment must conform to the requirements of the National Electrical Code.

B. There are advantages to incorporating timed under-voltage relays for motors on certain applications. Due to the normal, rapid reclosure of our supply circuit breakers, many manual restarts can be avoided by delaying motor contactor opening.

6.3 Single-Phase Motors

A. Single-phase motors not exceeding 50 amperes of starting current (typically up to 1 horsepower, 12,000 BTUs, or 1 ton) may be connected for 120 volt operation.

B. Single phase motors not exceeding 150 amperes of starting current (typically up to 5 horsepower, 60,000 BTUs, or 5 tons) should be connected for 240 volt operation.

6.4 Three-Phase Motors

A. Three-phase Design Code B, C and D motors, up to 50 horsepower inclusive, may be started across the line if they do not have locked rotor currents per phase conductor in excess of the following:

Maximum Allowable Motor Starting Current For Across the Line Starting			
HP	**208V**	**240V**	**480V**
Up to 10	179	155	78
11 -20	321	278	139
21 -30	481	417	208
31 -40	641	556	278
41 -50	802	695	347

B. For motors larger than 50 HP or for motors served at primary voltage (above 480 volts), contact UI's Customer Engineering Department for motor starting requirements.

7. EMERGENCY INTERRUPTION OF SERVICE AND EMERGENCY GENERATORS

7.1 Interruption of Service

The Company makes every effort to maintain its system to the highest possible standards but cannot assume liability as a result of any failure of its service or equipment. The Company reserves the right to interrupt service to a Customer without notice when repairs or changes make such a procedure necessary and also to restore service without notice when such work is completed. Any equipment that might endanger life or damage property under conditions of low voltage, single-phase operation, or normal switching should be provided with suitable automatic protection by the Customer. Please contact UI's Customer Engineering Department for guidance.

7.2 Emergency Generators

An independent source of electricity (such as gasoline or diesel driven generators) may be installed by a Customer to supply his load during emergencies. Such installations require an adequately sized double throw or open transition switch. The switch must be on the load side of the main disconnect switch and metering equipment. The switch must disconnect the Company's lines from the Customer's wiring before the generator can be connected to supply electricity.

Customers considering use of a closed transition switch in conjunction with an emergency/standby generator should contact UI's Customer Engineering Department for guidance. Detailed information and requirements may also be found on our website at **www.uinet.com** in the *"Business Services"* section titled *"Customer Owned Generation".*

8. ALTERNATE ENERGY SOURCE

8.1 Parallel Generation

Subject to certain requirements, the Company will allow parallel generation. In general, automatic synchronizing must be provided by the Customer together with automatic prevention of any feed into UI's de-energized system. Please contact UI's Customer Engineering Department and obtain a copy of CL&P and UI's *"Guidelines for Generator Interconnection"*. This document provides detailed requirements along with the application form and is also available on our website at **www.uinet.com** in the *"About UI–Doing Business with UI"* section titled *"Customer Owned Generation"*. The preliminary application should be filed early in the planning process to obtain assistance and the necessary approvals.

8.2 Uninterruptible Power Supply (UPS)

If this type of service is desired, it will be installed, owned, operated, and maintained by the Customer. The Customer must provide automatic prevention of any feed into UI's de-energized system. Please contact UI's Customer Engineering Department for guidance.

9. QUALITY OF SERVICE

A. Voltage Regulation

UI is required to maintain its voltage variations to within the requirements of The Regulations of Connecticut State Agencies, Title 16: Department of Public Utility Control (DPUC) Code of Electrical Standards and Specifications Section 16-11-115. To augment the DPUC requirements, UI has developed its own *"Guide to Power Quality"* manual based on our review of electric industry standards and practices. These documents are available upon request. UI will be glad to answer questions regarding voltage or power quality concerns. Please contact UI's Customer Engineering Department.

UI is constantly seeking new ways to improve the quality of power and reliability of service provided to its customers. Unfortunately, there are many variables that could possibly contribute to poor power quality that are beyond the Company's control including, but not limited to: equipment failure, tree contact, animal contact, severe weather, auto accidents, emergency switching, etc. Each of these events can produce voltage transients that may cause mis-operation of, or possibly damage to, electronic and other equipment.

Some of these events will result in momentary periods of low voltage or loss of voltage. In general, these events will not damage electronic equipment, but rather could result in their mis-operation. Some form of battery backup for the equipment will reduce these occurrences. However, extended periods of low voltage may cause damage to motor operated equipment. Refer to *Guidebook Section 6–Motors.*

Other events will produce brief periods of high voltage, which may damage electronic or other equipment. To protect against high voltages, the equipment manufacturer's recommendations regarding surge protection should be followed. In addition, installation of surge protectors at the service entrance will provide an added level of protection.

Customers supplied with a three-phase service should consider additional protection from certain disturbances on the UI system. Partial loss of power can result in 'single-phasing' which may cause damage to your equipment. Unless caused by negligence by UI personnel, the Company is not responsible for equipment and / or collateral damage due to these abnormal conditions. Customers are advised to install adequate protection.

B. Non-Linear Loads

Adjustable speed drives, compact fluorescent lamps, solid-state lighting ballasts and rectifier installations are all examples of non-linear loads. The term “non-linear” indicates the current drawn by this type of load is not sinusoidal and is referred to as containing “harmonic currents”. These harmonic currents can result in distorted voltage, added losses, and heating in equipment supplying the load as well as interference on telephone circuits.

Problems caused by these non-linear loads are to be corrected by the Customer at their expense. If the problem is isolated to within the Customer’s facilities, correction is optional. If these loads cause problems to UI’s system or to other Customer’s equipment, correction is mandatory. Customers with non-linear loads of more than 25% of their total load must contact UI’s Customer Engineering Department for assistance in applying the loads.

10. METERING

10.1 General Requirements

A. The Company will not supply service to a Customer whose wiring is designed for resale of electricity through submetering except for recreational campgrounds, marinas, or other facilities as approved by the Department of Public Utility Control (DPUC).

B. The Customer is required by Regulations of the State of Connecticut to provide the Company reasonable access to its equipment, and access shall include a minimum of 3 feet of clear space in front of the meter and be neither obstructed nor hazardous as defined by the National Electric Code.

C. All unauthorized persons are forbidden to connect, disconnect, relocate, tamper with or break seals on service entrance equipment, metering equipment, or pull boxes and troughs housing un-metered conductors. This requirement is not intended to prevent the Customer from operating the main switch or replacing blown fuses.

D. When it is necessary to cut or remove a meter seal and/or de-energize an existing meter, for any reason, the Company must be notified promptly. Please call UI's Client Relations Center at **1-800-722-5584** (or **499-3333** if you are local to the New Haven exchange). All other equipment such as a Water Heater Adaptor, a Surge Protector, a Remote Disconnect Device must be handled with care and the company notified so this equipment can be installed.

E. All costs associated with damaged metering equipment or personal liabilities claim as a result of work performed by non UI employees will be charged to the responsible party.

F. Only Company approved sockets and metering equipment shall be installed. Refer to *Appendix A–Approved Metering Equipment.*

G. Under no condition will the Company approve the installation of metered and unmetered conductors in the same conduit, raceway or wiring trough. In combination meter-main service equipment, the line and load wiring must be isolated to their respective compartments.

H. On all new construction and revamps of existing services, including jobs involving meter work only, the meter(s) shall be located outdoors and mounted on the structure unless permission is granted in writing by the Company to install the meter(s) indoors.

If indoor metering is desired, the Customer must send a written request detailing their specific reasons to the Company's Meter Engineering group as far in advance of construction as possible to avoid last minute delays. Reasons for installing metering equipment indoors may include a lack of exterior wall space or the inability to terminate service cables or conduits in a feasible location for the metering provisions as determined by Company field technicians. Personal financial hardship will not be considered sufficient reason for retaining indoor metering equipment to avoid normal installation costs associated with installing the metering outdoors. The Company will then send the Customer a letter approving or denying their request. The personnel of the Meter Engineering group are the only Company representatives authorized to grant such approval. Meter sockets may not be located in driveways or other locations that will pose a hazard to pedestrian or vehicle traffic. For all indoor meter locations (granted by UI prior to the start of any construction) the Owner will be required to provide a 1" minimum diameter Schedule 40 PVC conduit from the meter location to the outside of the structure and a dedicated circuit from the Owner's (house) panel to facilitate the installation of antennas for automated meter reading equipment. Refer to *AVAILABLE METERING TABLE* at the end of this section.

I. All meter locations must be installed according to Company requirements:

1. Where the location of an outdoor meter would be a hazard to the public or to the equipment, the Company will determine a more suitable location or require the Customer to provide additional protection for the meter(s).
2. Meters and low voltage service equipment shall not be installed in transformer vaults, high voltage switchgear rooms, or other such restricted access areas.
3. Meters will not be installed where they will be subject to corrosive fumes, excessive moisture, dust, vibration or possible damage.
4. In large office buildings and apartment buildings, where separate meters are required for the various offices, apartments, suites, or lofts, metering equipment may be installed indoors, in groups, at locations approved in writing by UI. All such locations (designated meter rooms or closets) will be required to provide an additional 1" minimum diameter Schedule 40 PVC conduit from the meter location to the outside of the structure and a dedicated circuit from the Owner's (house) panel to facilitate the installation of antennas for automated meter reading equipment.
5. Meters for emergency systems, such as fire pumps, are to be located adjacent to other meters serving the building, where practical.

6. Meters may be allowed to be mounted on pedestal style socket equipment only in mobile home developments or other service locations such as outdoor signs, communications towers, etc. These installations are limited to single-phase, 120/240 volt, 200 amps or less. Other types of free standing metering provisions must be approved in writing by UI.

7. In some shoreline areas designated as a tidal flood plain, the Customer may be required by the local town electrical inspector to install the meter provision higher than the maximum 72 inches allowed by the Company. In such cases, the Customer will be required to construct a suitable stepped platform or other means to facilitate access for Company employees to perform meter work. If such a platform cannot be built, the Customer may be charged for future expenses incurred by the Company to perform its work that is above and beyond normal expenses. In some cases, this may include costs associated with the use of a bucket truck and extra personnel to perform the work safely and efficiently. Failure to comply will result in the company de-energizing the service and the customer and/or contractor will be responsible for bringing the service to UI standards.

J. For all three-phase, 4 wire delta or wye services where the secondary service is grounded at any point, the grounded conductor shall be run to each main switch or service disconnect (in accordance with National Electric Code). In addition, the grounded conductor shall be run to each meter provision (i.e. meter socket or current transformer cabinet).

K. Single-phase, 200 amp class meter sockets for temporary services are allowed (but not required) to have bypass provisions.

L. To ensure safety, all meter sockets that are without a meter and energized will be protected with a “see-thru” polycarbonate cover. These covers are available from UI and are to be installed by the electrical contractor. If the meter socket is intended to be a spare or otherwise left without a meter for a period exceeding 6 months, then a gasket or silicone sealant should be applied between the polycarbonate cover and the meter socket cover to prevent the entry of water.

M. Meter sockets can not be used as a grounding point. The grounding electrode conductor shall not be run through the meter socket and the grounding electrode conductor connection shall not be made within the meter provision.

N. Electric meter provisions shall not be installed above or below gas meters and require a minimum of 3 feet of horizontal separation (5 ft. preferred).

O. For customer generation where the cumulative total nameplate of all generation at that location totals 500 kW or less (if powered by a renewable resource such as wind, hydro or photovoltaic) or 50 kW or less of total nameplate generation if fossil fuel prime movers or fuel cells are used, the electric service will be metered for revenue purposes primarily using two watt-

hour meters with detents or, if feasible, one watt-hour meter capable of measuring bi-directional or net power flow. This type of metering is referred to as “Net Energy Metering”. If no provision is made for power sale to UI, one watt-hour meter with a detent will be used. UI may choose to meter generator output, customer loads, or other quantities it deems desirable. The customer may be required to install metering facilities, such as meter sockets, to facilitate this metering.

P. For customer generation where the cumulative total nameplate of all generation at that location is in excess of the requirements for “Net Energy Metering” but equal to or less than 5,000 kW, the electric service shall be metered for revenue purposes primarily using two watt-hour meters with detents or, if feasible, one watt-hour meter capable of measuring bi-directional power flow. If no provision is made for power sale to UI, one watt-hour meter with a detent will be used. UI may choose to meter generator output, customer loads, or other quantities it deems desirable. The customer may be required to install metering facilities, such as meter sockets, to facilitate this metering.

Q. Please see the United Illumination Company Generation Interconnection Technical Requirements for additional information.

10.2 Auxiliary Equipment, Emergency Circuits, and Emergency Generators

A. No ammeter, voltmeter, pilot light, surge suppressor or other device shall be connected to the secondary of the metering transformers or to the service conductors between the point of entrance and the point at which the metering equipment is connected to the circuit unless an integral part of an approved UL listed switchboard design. No field add-on will be allowed.

B. Where State or local ordinance requires the installation of a circuit for emergency systems, such as fire pumps, fire alarms, or exit lighting, on the line side of the normal metering, an additional metering provision shall be required.

C. Services to electric motor driven fire pumps must be metered using switch-fuse-meter sequence and transformer rated metering to ensure that the meter is not called upon to carry overloads required by NFPA and does not serve as a disconnecting means and interrupt power to the fire pump if it is removed for any reason.

D. Metering must always be installed on the line side of control circuitry such that the meter is always energized when the service is energized.

E. If a double throw switch is installed by the Customer to supply his load from an emergency generator, it must use an open transition throwover scheme. The switch must be installed on the load side of the meter and must be connected so that the electricity from the Customer's generator will not flow back into the Company's lines. See *Section 7.2 Emergency Generators.*

10.3 Equipment Marking Requirements

A. Where more than one set of metering equipment is supplied through one service entrance, each set of metering equipment and each corresponding apartment, distribution panel, or load center must be marked, using a nameplate or other permanent marking, with the corresponding number or letter designations of each unit (such as Apt. C or Suite #103).

B. Each service disconnect shall be permanently marked in large conspicuous block letters as either "MAIN SWITCH" or "SERVICE DISCONNECT", per NEC requirements.

C. Where more than one kind of service is supplied, each service disconnect should be identified in the same manner, per NEC requirements. The nameplate or sign should also state the voltage and phase characteristics of the service, and the number and location of the other services.

D. On three-phase, four wire delta services (120/240/240 volts); the phase having the higher voltage to ground shall be permanently marked with an orange color in switchboards, panelboards, and CT cabinets. On services utilizing modular gang socket metering (up to and including 200 ampere provisions) and feeding both three-phase and single-phase meter sockets, the equipment must be capable of field modification through phase balancing taps to configure the high leg on the upper right jaw of the three-phase sockets while maintaining proper 120/240 volt configuration to the single-phase sockets. EXCEPTION: On services exclusively utilizing transformer rated metering, this phase is required on the right; however, if the switchgear is manufactured with this phase in the center, it will be allowed to remain in the center.

10.4 Approved Metering Equipment

Only metering equipment specifically approved by UI may be installed on our system. This equipment is also subject to the approval of the authority having jurisdiction (usually the Municipal Electrical Inspector). The list of equipment may be revised from time to time. Information on the latest revisions is available from UI. Metering equipment contained in this list is furnished, installed, owned, and maintained by the Customer unless otherwise specified in writing by UI. See *Appendix A–Approved Metering Equipment* for a listing of the metering equipment currently approved by UI.

10.5 Sequence of Service Entrance Equipment–Rated 480 Volts and Below

A. The meter-switch-fuse (hot) sequence shall be used for all single meter socket type installations (meter socket rated 200 amperes and below).

   EXCEPTION: For services where the available short circuit current exceeds the rating of the meter socket, switch-fuse-meter (cold) sequence shall be installed. Typically, this requirement pertains to services from vaults where the short circuit protection requirements are 200,000 amperes. Refer to *Guidebook Section 3.4*.

B. The meter-switch-fuse (hot) sequence is preferred for all installations of pre-bussed multiple meter banks where 6 sockets or less are installed. NOTE: The Customer may install a fusible main switch or circuit breaker in lieu of a main lug section and switch-fuse-meter (cold) sequence is acceptable (see *EXCEPTION* in paragraph A above).

C. The switch-fuse-meter (cold) sequence shall be used for all installations of multiple meter banks where troughs or wireways are used or where 7 or more pre-bussed sockets are installed (i.e. a main switch is required).

D. The meter-switch-fuse (hot) sequence shall be used for all “class 320” (320 ampere continuous rated, self-contained, lever bypass, socket type meter) single-phase, 120/240 volt installations as well as three-phase, 120/208 volt, “class 320” ampere installations not fed from one of UI’s network grids. Refer to *AVAILABLE METERING TABLE* at the end of this section.

E. The switch-fuse-meter (cold) sequence and transformer rated metering shall be used for all installations rated 600 amperes and above as well as optionally for all 400 ampere services.

F. The switch-fuse-meter (cold) sequence shall be used for all “class 320”, three-phase, 277/480 volt, 400 ampere installations as well as all “class 320”, three-phase, 120/208 volt installations fed from one of UI’s network grids. Refer to *AVAILABLE METERING TABLE* at the end of this section.

G. The switch-fuse-meter (cold) sequence and transformer rated metering shall be used for all services to electric motor driven fire pumps. Refer to *AVAILABLE METERING TABLE* at the end of this section.

10.6 Requirements for Self-Contained Socket Metering—Rated 200 Amps and Below

A. Ringless sockets without bypass features rated up to and including 200 amperes may only be installed on single-phase, single meter residential installations (including temporary services). NOTE: Single family residential services may be supplied with manual lever operated bypass sockets at the Owner’s option. UI recommends the use of bypass sockets to reduce service interruptions due to meter maintenance.

B. Ringless sockets with manual lever operated bypass rated up to and including 200 amperes shall be used for all single-phase multi-meter residential, all single-phase commercial, all three-phase commercial and residential, and all house meter installations. EXCEPTION: Temporary services may utilize sockets without lever bypass.

C. Ringless sockets with the fifth terminal at the 9 o’clock position are required for all single-phase, 3 wire, 120/208 volt services up to and including 200 amperes. Refer to *AVAILABLE METERING TABLE* at the end of this section.

D. For residential rate RT (and former rate A) customers who have an existing six jaw meter socket used in conjunction with water heater control, and who are revamping or upgrading their electric service, a meter socket without a bypass, having 5th and 6th jaws located at the 3 and 9 o’clock positions shall be installed to maintain water heater control capability.

   EXCEPTION: In the case of multi-unit upgrades, lever bypass sockets without 5th and 6th jaws must be installed which would require the Company to install tank mounted water heater control equipment.

E. Installation of Sockets.

1. Meter sockets must be mounted plumb using round head, rust resisting wood screws of sufficient length to hold the socket securely, independent of conduit or cable connections.
2. Suitable anchors must be used on masonry or brick walls for outdoor installations.
3. A meter board is required for all indoor installations. This board should be made of moisture proof plywood at least ¾" thick and painted. It should be mounted plumb and level on a permanent wall with at least ¾" air space between the board and the wall.
4. Where two or more individual meter sockets are used in multiple, line side conductors must be carried in a separate wiring trough.
5. The preferred type of multiple socket installation is a vertical or horizontal, pre-bussed arrangement.

10.7 Requirements for “CLASS 320” Self-Contained Lever Bypass Socket Metering

A. All residential and commercial services rated 400 amperes, single-phase, 120/240 volts may utilize the optional “class 320” (320 ampere continuous rated) self-contained, heavy duty locking jaw, lever bypass, socket type meter in lieu of transformer rated metering. NOTE: "Class 320" metering is not available for single-phase, 120/208 volt services. Refer to *AVAILABLE METERING* at the end of this section.

B. All commercial services rated 400 amperes, three-phase, 120/208 and 277/480 volts may utilize the optional “class 320” (320 ampere continuous rated) self-contained, heavy duty locking jaw, lever bypass, socket type meter in lieu of transformer rated metering.

C. All “class 320” meters shall be located outside. The Customer, at his option, may install his service entrance equipment indoors with transformer rated metering and a remote meter socket located outside and mounted on the structure.

D. For underground services, the line side conductors shall enter the bottom and shall be routed up through the left side gutter to the line side lugs. For overhead services, the line side conductors shall be top entry.

E. **NOTE:** The “CLASS 400” bolt-in metering is no longer approved by UI for new or revamped services.

F. Refer to *Section 10.5.D* and *10.5.F* for additional “class 320” information.

10.8 Requirements for Transformer Rated Metering

A. All services above 400 amperes and all services to fire pumps regardless of size require transformer rated metering. Refer to *AVAILABLE METERING TABLE* at the end of this section.

B. Ringless sockets with provision for mounting a test switch must be used for all transformer rated metering applications.

C. The Company will provide and install all metering transformers, meters, test switches, and wiring to the test switches.

D. Where a Ground Fault Interrupter is installed on a Customer’s service, the Customer shall supply and install a grounding electrode to the current transformer enclosure. The current transformer secondary will be grounded to the grounding electrode conductor and not to the system neutral.

E. The Customer shall provide a 1-½" conduit, either metallic or non-metallic, without junction boxes, for the wiring between the metering transformers and the meter socket. The remote meter socket shall be effectively bonded either through the metallic conduit or by a #10 awg copper wire installed in the conduit. The electrical contractor shall install a pull line.

F. For services of 800 amperes or below, the maximum circuit length from the metering transformers to the meter socket must not exceed 75 feet. For services of more than 800 amperes, the maximum circuit length from the metering transformers to the meter socket must not exceed 150 feet. Exceptions will be made only with written permission from UI's Customer Engineering Department.

G. In general, meter sockets should be mounted on an outside wall as close to the metering transformer location as possible.

H. A current transformer cabinet or combination switch shall not be used as a wiring trough. Full width barriers on the top and bottom of the metering section shall isolate the current transformer compartment of a combination switch. If additional gutter space is required, the current transformer compartment shall be provided with side and/or rear barriers. Where a current transformer compartment is enclosed within a larger enclosure, the current transformer wiring must exit the current transformer compartment in conduit that is securely attached to the compartment.

I. In all transformer rated metering applications, the current transformer cabinet must have provisions for locking and sealing. In addition, the main switch must have provision for padlocking in the open position.

J. For services up to and including 1,200 amperes, the current transformer enclosures must be equipped with mounting plates for bar type current transformers with 11-7/8" long primary bars. For services greater than 1,200 amperes, the current transformer enclosures must have removable bolt-in bus bars with supplemental support brackets of non-conductive material to adequately support window type (donut) current transformers.

K. Window type current transformers without a bolt-in bar (i.e. around conductors or transformer bushings) may be used to revamp existing facilities provided: no current transformer cabinet was present before; no space is available for a new current transformer cabinet; the Customer is not served from a network vault; and it will not be necessary to de-energize other Customer's service to install or remove them. Requests to use window type current transformers in this manner must be submitted by the Customer, in writing, to UI's Customer Engineering Department. If permission is granted, the reply will be in writing. This type of installation is not approved for new construction.

10.9 Optional Metering Services Offerings

Optional metering services offerings such as meter load output pulses and web-based energy profile information are available to all customers. There is a charge for such services. Please contact UI for a schedule of charges and more information.

Supply Characteristics			Self Contained Metering		Instrument Transformer Metering	
Voltage	**Phase**	**Wire**	**Ratings of Disconnects**	**See Guidebook**	**Ratings of Disconnects**	**See Guidebook**
120/240	1	3	400 Amps and less 320 box hot sequence	P. 36 Section 10.7.A	400 Amps & above Cold sequence	P. 37 Section 10.8.A
120/208	1	3	200 Amps and less	P. 36 Section 10.6.C	Not available	
120/208Y	3	4	400 Amps and less 320 box hot sequence	P. 35 Section 10.5.D	400 Amps & above Cold sequence	P. 37 Section 10.8.A
120/208Y Network	3	4	400 Amps and less 320 box **COLD** sequence	P. 35 Section 10.5.F	400 Amps & above Cold sequence	P. 37 Section 10.8.A
277/480Y	3	4	400 Amps and less 320 box **COLD** sequence	P. 35 Section 10.5.F	400 Amps & above Cold sequence	P. 37 Section 10.8.A
FIRE PUMP	3	4	Not available		All services Cold sequence	P. 35 Section 10.5.G

HOT SEQUENCE: METER-SWITCH-FUSE
COLD SEQUENCE: SWITCH-FUSE-METER
ALL CLASS 320 METERS SHALL BE LOCATED OUTSIDE SEE P. 37, SECTION 10.7.C
CLASS 320 METERS CANNOT BE USED IN MULTIMETER BANKS
CLASS 320 METERS NOT AVAILABLE FOR SINGLE PHASE, 120/208V SEE P. 36, SECTION 10.7.A
INDOOR METERING REQUIREMENTS SEE P. 29, SECTION 10.1.

11. ENERGY DIVERSION/THEFT OF SERVICE

UNDER NO CIRCUMSTANCES WILL ELECTRICITY BE SUPPLIED WITHOUT BEING METERED OR OTHERWISE ACCOUNTED FOR UNDER SPECIAL WRITTEN CONTRACTS MADE WITH UI. ANY INSTALLATION WHERE THE USE OF ELECTRICITY IS NOT BILLED CONSTITUTES ENERGY DIVERSION AND IS SUBJECT TO FINANCIAL RESTITUTION AND CRIMINAL PENALTIES. IF THE ELECTRICAL CONTRACTOR DISCOVERES A PONTENTIAL THEFT OF SERVICE PRIOR TO STARTING WORK HE/SHE WILL STOP THE JOB AND REPORT THE PONTENTIAL THEFT OF SERVICE BY CALLING UI'S REVENUE PROTECTION DEPARTMENT AT 1-800-891-2922.

11.1 General Requirements

A. The Company reserves the right to enter the Customer's property and inspect and test UI's equipment at any time without notice. If access into a building is required, UI will make every attempt to do this during normal working hours or UI will make specific arrangements with the property owner.

B. The Company reserves the right to enter the Customer's property and inspect and test customer owned equipment that houses unmetered electricity at any time without notice. The Company reserves the right to install locking devices on this equipment.

11.2 Refusal or Discontinuance of Service

A. The Company may discontinue service without notice in the event un-metered electricity is found to be used or if a known dangerous condition exists in the Customer's wiring or appliances.

B. The Company reserves the right to discontinue service to any location where additional metering is required and/or proper permits have not been filed with the authority having jurisdiction (usually the Municipal Electrical Inspector).

C. The Company may terminate service for the following:

1. Fraud or material misrepresentation in obtaining utility service. This includes but is not limited to:
    a. The use of personal identification or personal identifying information of that of another to include a minor child or ones own minor child.
    b. The alteration, elimination or exclusion of information on documents for purposes of deception or misrepresentation.
2. Violation of or non-compliance with the rules of the Company which have been filed with and approved by the DPUC.
    a. This includes equipment that is not Company approved.
3. Failure of the Customer to provide the Company reasonable and unobstructed access to its equipment.
    a. Reasonable access may include two (2) or more failed appointments.
    b. All metering must have at least three (3) feet of open space surrounding the equipment for purposes of safety.
4. In the event unauthorized service either metered or un-metered is found to be used.
    a. The Company will hold the individuals liable for all unauthorized service upon determining the point in time which the individual began receiving such service.
5. Customer refuses to correct an unsafe condition when such condition is a result of faulty or poorly maintained customer equipment.
    a. All corrected conditions must meet NEC standards and be inspected by the appropriate local official (usually the Municipal Electrical Inspector) whenever appropriate.
6. Customer fails to install/move the meter provision (on a service upgrade) outside and fails to obtain prior approval for an inside meter provision.

D. A fee may be charged to defray the costs in such matters as per policy approved by the Department or Public Utility Control (DPUC).

11.3 Jumpered Metering

UI allows electrical contractors to install jumpers in meter sockets as a means to facilitate work and to minimize disruption of service to its customers. Electrical contractors are obligated to obtain permits and electrical inspector's releases in a timely manner to minimize the time that the meter socket is jumpered. Failure to do so is a violation of UI requirements and may result in the suspension of your qualification to perform electrical service work in UI's franchise area. In addition, the jumpers may be removed and/or the service disconnected by UI in accordance with Section 11.2 (above). The Company will install a meter on all load carrying meter provisions within 30 days.

12. SERVICE MATERIALS AVAILABLE AT TOWN HALLS

Town	Service Bolts	Meter Covers	Jumpers
Ansonia	No	No	No
Bridgeport	No	No	No
Derby	No	No	No
East Haven	No	No	No
Easton	No	Yes	No
Fairfield	Yes	Yes	Yes
Hamden	No	No	No
Milford	Yes	Yes	No
New Haven	Yes	Yes	No
North Branford	No	No	No
North Haven	No	No	No
Orange	No	No	No
Shelton	Yes	Yes	Yes
Stratford	No	No	No
Trumbull	Yes	Yes	No
West Haven	No	No	No
Woodbridge	Yes	Yes	No

All materials, including jumpers, are also available at UI's Electric Systems Work Center located on 801 Bridgeport Avenue in Shelton and at UI's Standard Field Office located on 1 Waterfront Street in New Haven.

Guidebook Standards

13. GUIDEBOOK STANDARDS

Guidebook Standard #1	**Overhead Service**
Guidebook Standard #2	**Overhead Service Entrance Facilities**
Guidebook Standard #3	**Service Attachment for Masonary Building**
Guidebook Standard #4	**Service Mast**
Guidebook Standard #5	**Road Crossing Pole Overhead Service**
Guidebook Standard #6	**Road Crossing Pole Underground Service**
Guidebook Standard #7	**Road Crossing Pole–Greater Than Normal Span**
Guidebook Standard #8	**Guideline for Network Services–800 Amps or Less 120/208 Volts**
Guidebook Standard #9	**Guideline for Network Services–Greater Than 800 Amps 120/208 Volt or 277/480 Volt**
Guidebook Standard #10	**Temporary Overhead Service Post Installation**
Guidebook Standard #11	**Temporary Underground Service**
Guidebook Standard #12	**Typical Outdoor Meter Installation Overhead 1 Phase Service Meter–Switch–Fuse Sequence**
Guidebook Standard #13	**Typical Outdoor Meter Installation Underground 1 Phase Service Meter–Switch–Fuse Sequence Service Cable in Conduit**
Guidebook Standard #14	**Typical Indoor Meter Installations 1 Phase 3 Wire Self Contained Switch–Fuse–Meter Sequence Individual Service Ratings 200 Amp. Max.**
Guidebook Standard #15	**Typical Indoor Meter Installations 3 Phase 4 Wire Self Contained Switch–Fuse–Meter Sequence Individual Service Ratings 200 Amp. Max.**

Guidebook Standard #16	**Typical CT Rated Meter Installation 3 Phase 4 Wire Service Switch–Fuse–Meter Sequence Service Rating Over 200 Amp.**
Guidebook Standard #17	**Typical Single & Three Phase Transformer Rated Socket with Mounting Provision for Test Switch**
Guidebook Standard #18	**Typical Current Transformer Cabinet with CT Rack**
Guidebook Standard #19	**Typical Metering Enclosures for Primary and Secondary Transformer Rated Meter & Test Switch**
Guidebook Standard #20	**Up to 320 Amp–1 Phase 3 Wire 120/240V 4 Terminal Meter Socket**
Guidebook Standard #21	**Up to 200 Amp–1 Phase 3 Wire 120/208V Network 5 Terminal Meter Socket**
Guidebook Standard #22	**Up to 320 Amp–3 Phase 4 Wire 208Y/120V or 480Y/277V Grounded Wye 7 Terminal Meter Socket**
Guidebook Standard #23	**Up to 320 Amp–3 Phase 4 Wire 120/240/240V Delta 7 Terminal Meter Socket**
Guidebook Standard #24	**Underground Service from Wood Poles**
Guidebook Standard #25	**Underground Services from Transformers or Hand Holes**
Guidebook Standard #26	**Single Phase Transformer Installation**
Guidebook Standard #27	**Three Phase Transformer Installation**

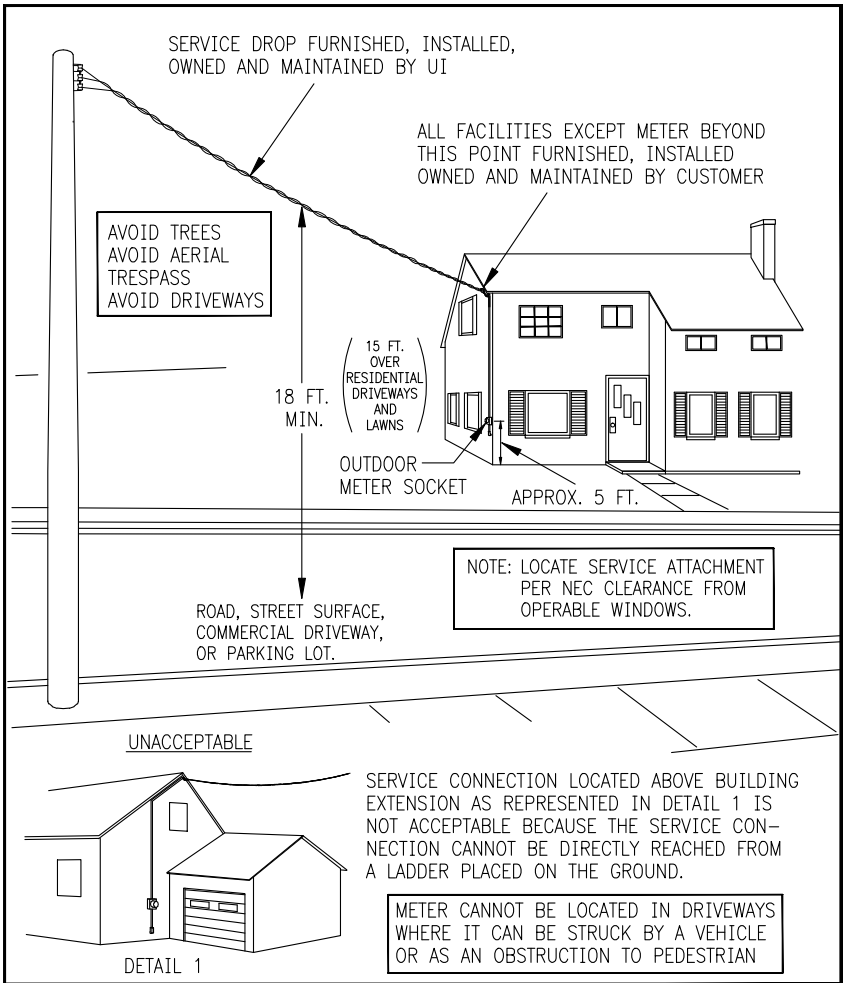

GUIDEBOOK STANDARD #1

OVERHEAD SERVICE

PAGE 1 OF 2

(SEQUENCE # 047725) (12/00)

ACCEPTABLE SERVICE RUNS

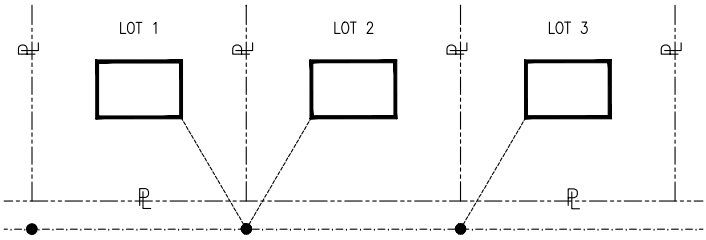

1). BEWARE OF TREES

2). BEWARE OF GRADE CHANGES UNDER OR AROUND THE SERVICE DROP WHICH WOULD INTERFERE WITH OR REDUCE GROUND CLEARANCE TO BELOW 18 FEET. (15 FEET OVER RESIDENTIAL DRIVEWAYS AND LAWNS)

NOT ACCEPTABLE SERVICE RUNS
AERIAL TRESPASS \ MID SPAN TAP

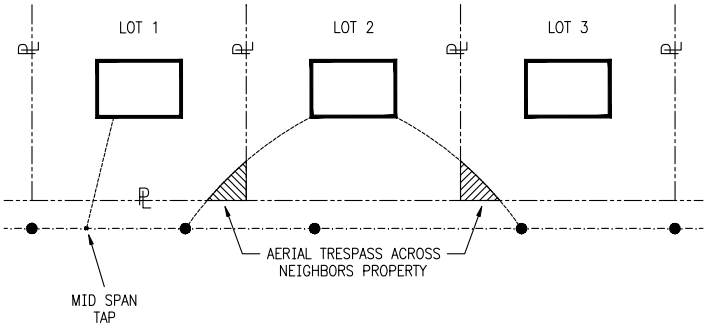

GUIDEBOOK STANDARD #1

OVERHEAD SERVICE

PAGE 2 OF 2

(SEQUENCE # 058338) (12/00)

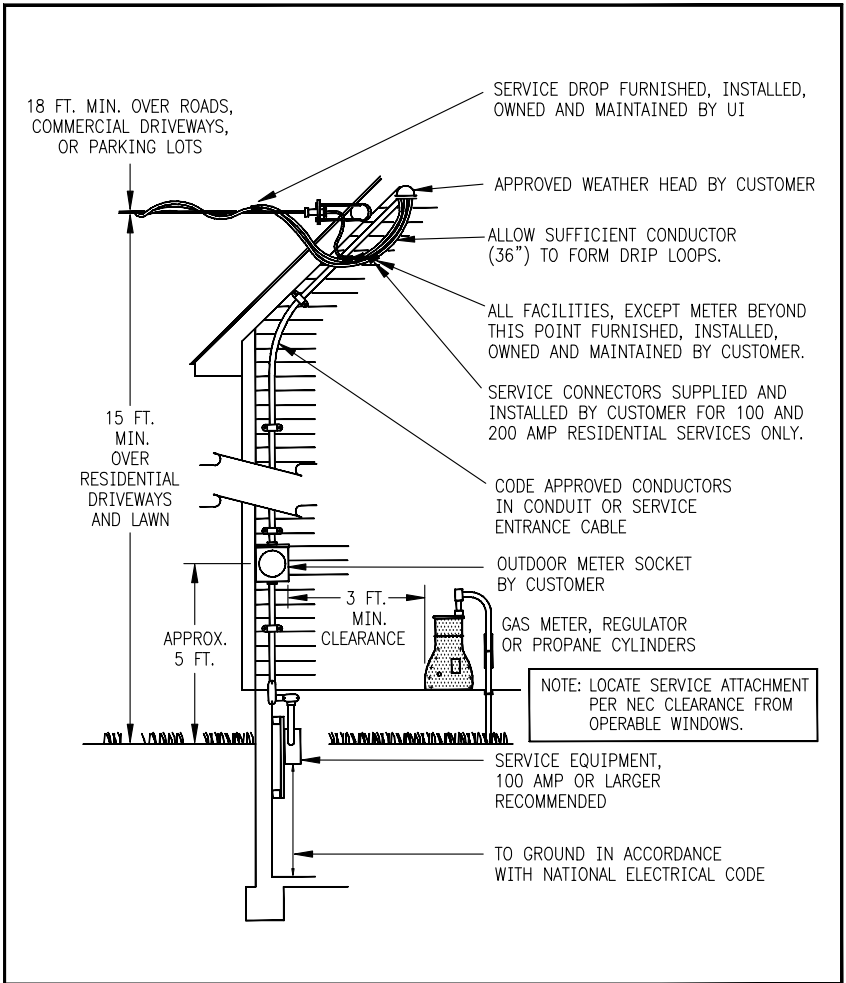

GUIDEBOOK STANDARD #2

OVERHEAD SERVICE ENTRANCE FACILITIES

(SEQUENCE # 047726) (03/02)

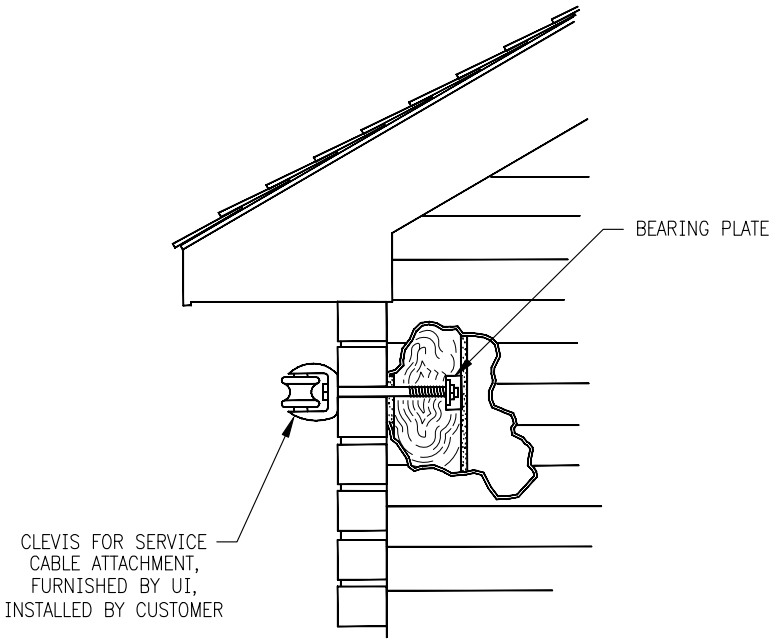

GUIDEBOOK STANDARD #3

SERVICE ATTACHMENT FOR
MASONARY BUILDING

(SEQUENCE # 047727) (11/93)

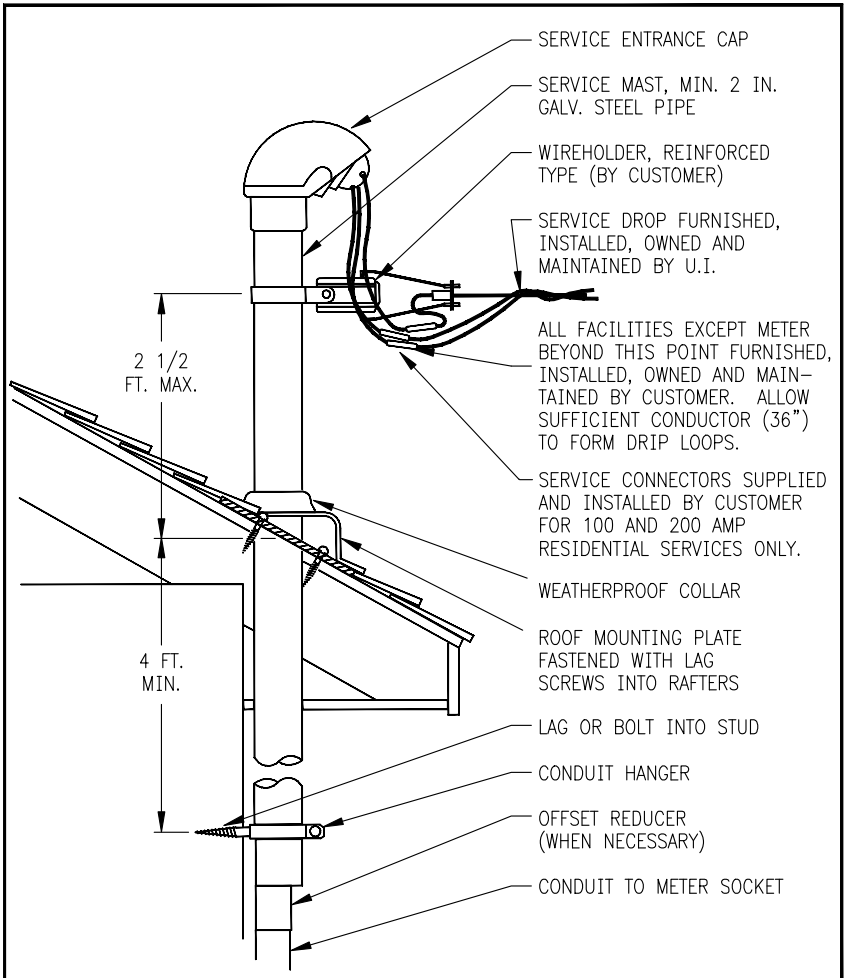

GUIDEBOOK STANDARD #4

SERVICE MAST

(SEQUENCE # 047728) (2/97)

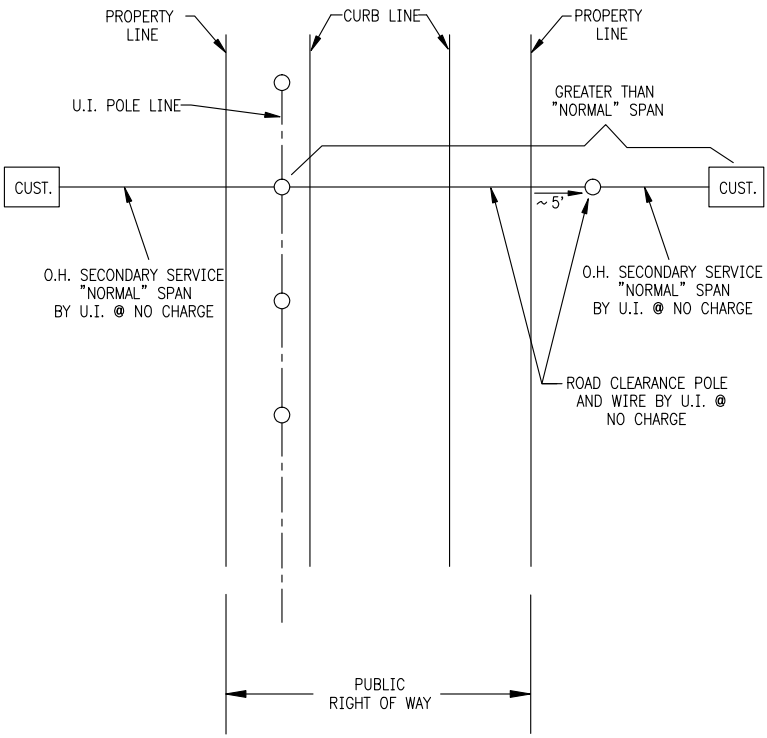

NORMAL SPAN IS 150 FT.
PROVIDED GRADE
CLEARANCES CAN BE MET.

GUIDEBOOK STANDARD #5

ROAD CROSSING POLE
OVERHEAD SERVICE

(SEQUENCE # 047733) (10/97)

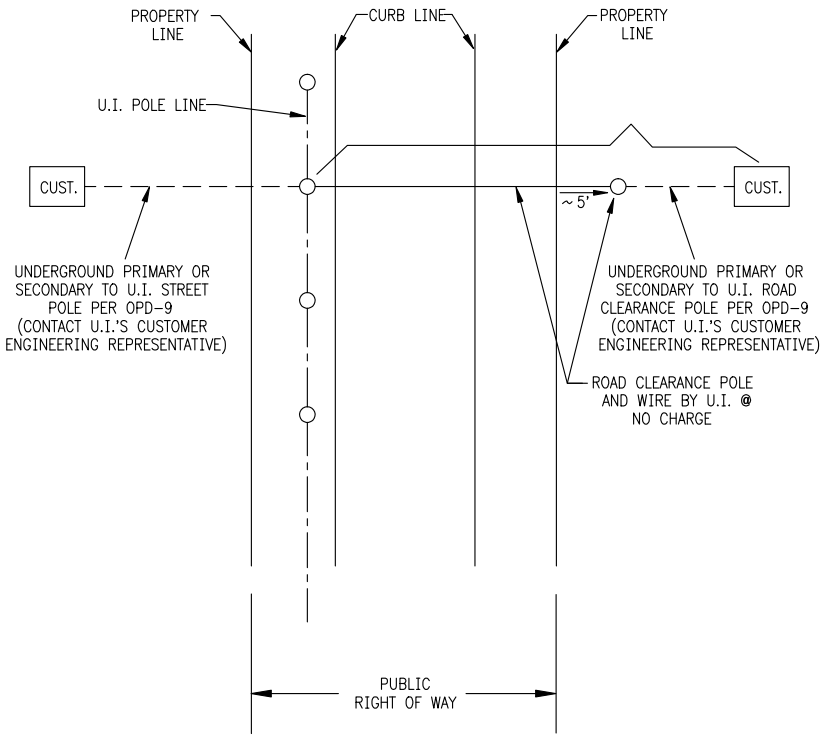

GUIDEBOOK STANDARD #6

ROAD CROSSING POLE
UNDERGROUND SERVICE

(SEQUENCE # 047734) (REVISED MEC 04/09/08)

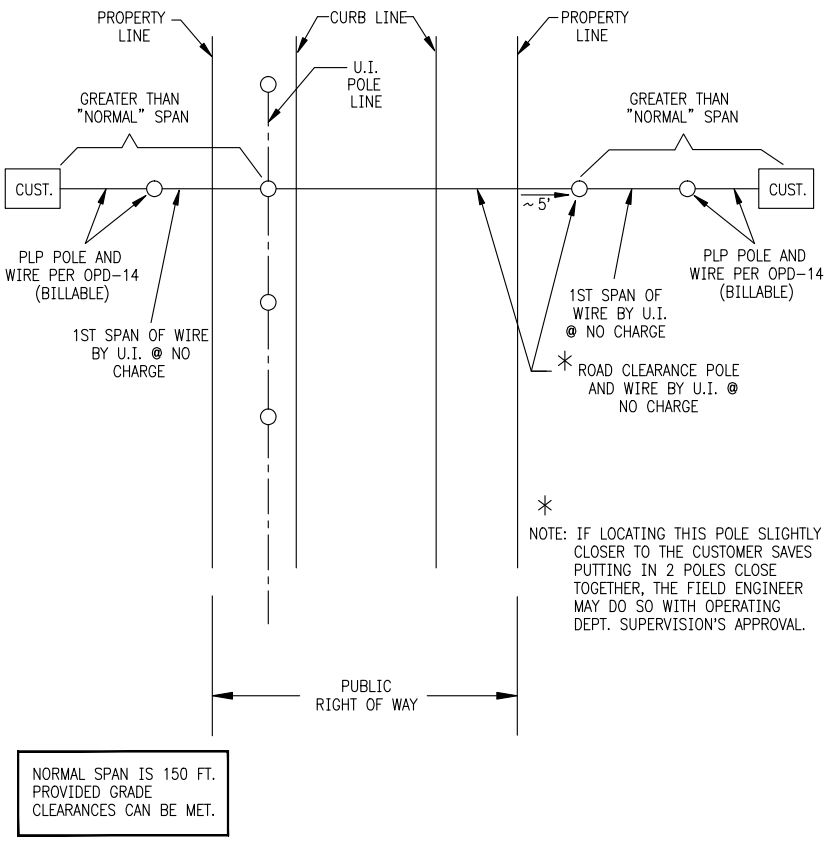

GUIDEBOOK STANDARD #7

ROAD CROSSING POLE
GREATER THAN NORMAL SPAN

(SEQUENCE # 047735) (10/97)

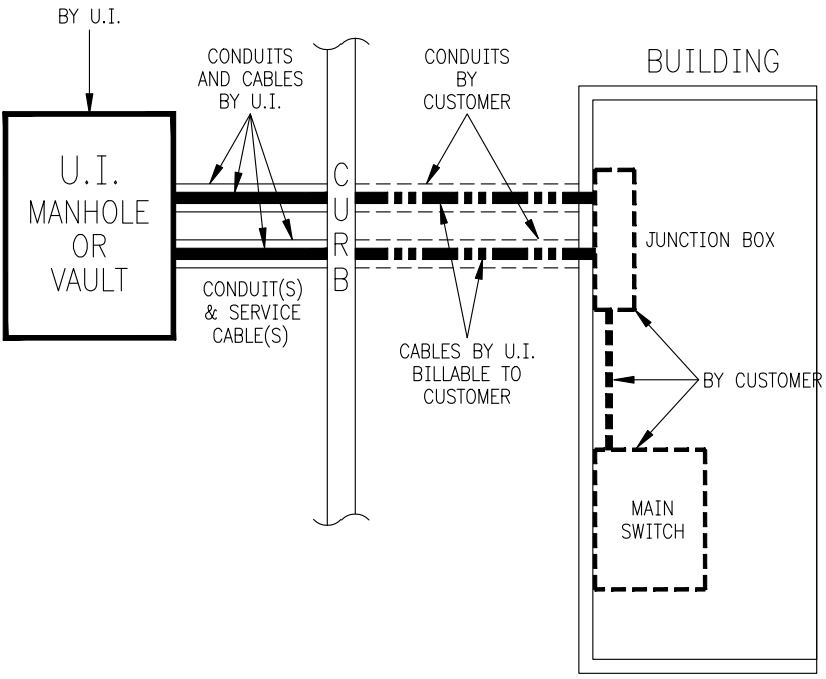

JUNCTION BOX REQUIREMENTS

200 AMP.	16"x16"x6"	SEE U.I. DWG. 16102-917
400 AMP.	28"x28"x12"	SEE U.I. DWG. 16102-916
600 ANP.	36"x36"x16"	SEE U.I. DWG. 16102-915

GUIDEBOOK STANDARD #8

GUIDELINE FOR NETWORK SERVICES
800 AMPS OR LESS 120/208 VOLTS

(SEQUENCE # 047729) (REVISED MEC 04/10/08)

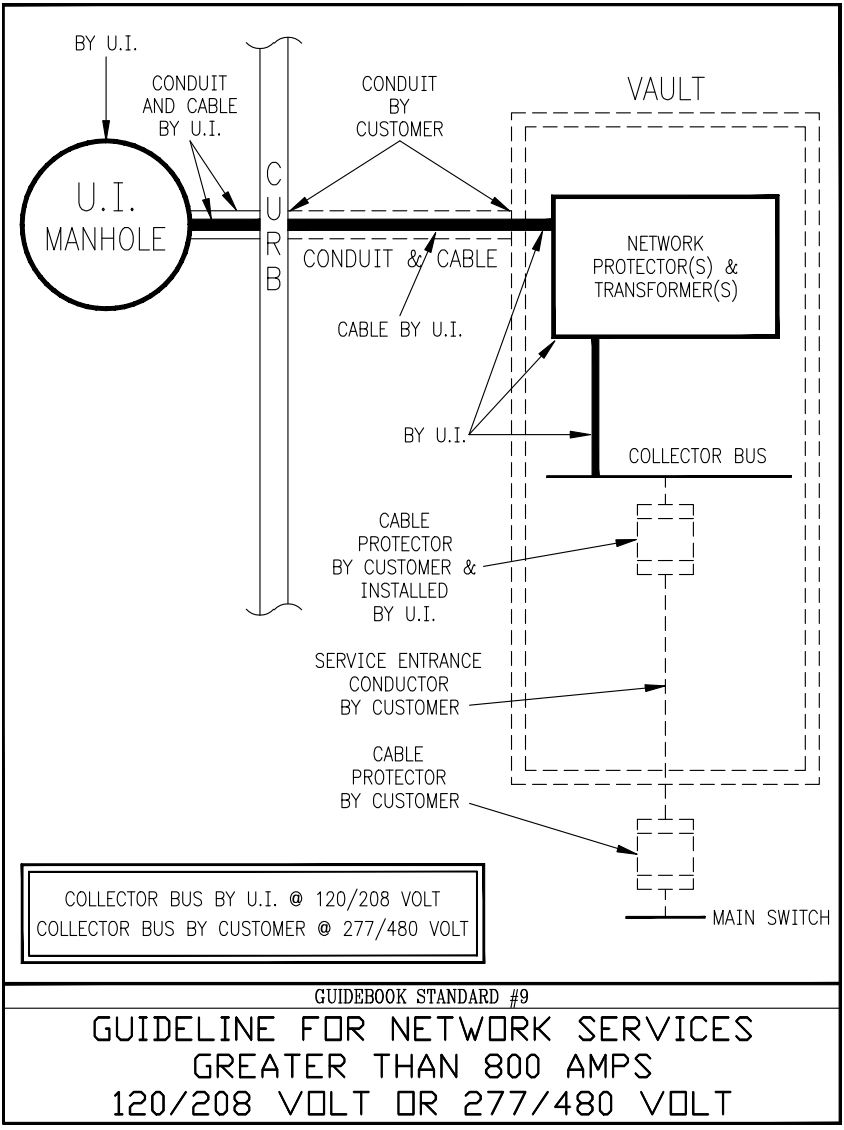

GUIDEBOOK STANDARD #9

GUIDELINE FOR NETWORK SERVICES
GREATER THAN 800 AMPS
120/208 VOLT OR 277/480 VOLT

(SEQUENCE # 047730) (REVISED MEC 04/09/08)

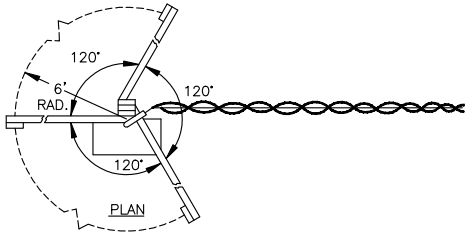

NOTES:

A. THE SERVICE ATTACHMENT MUST PROVIDE A MINIMUM CLEARANCE OF 12 FT. ABOVE AREAS ACCESSIBLE TO PEDESTRIANS AND 18 FT. ABOVE DRIVEWAYS, ALLEYS, AND PUBLIC ROADS.

B. THIS STANDARD IS TO ASSURE PROPER CONSTRUCTION OF THE SUPPORTING MEMBERS, ALL ELECTRICAL CONNECTIONS AND MATERIALS SHALL MEET THE N.E.C., N.E.S.C. AND ANY LOCAL REQUIREMENTS.

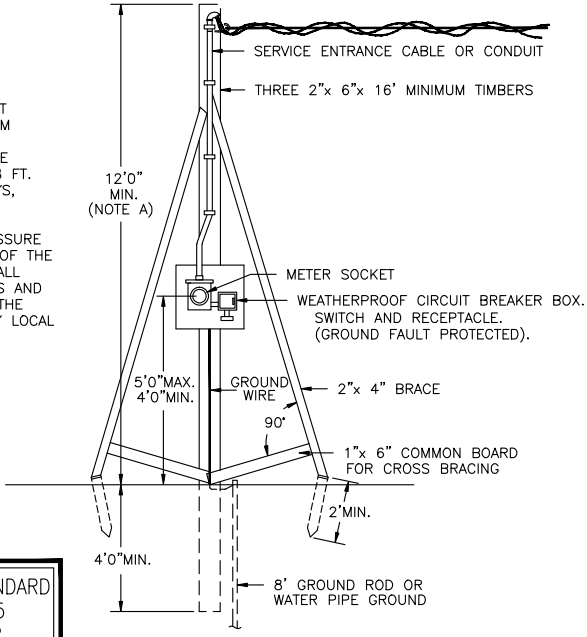

DISTRIBUTION STANDARD
DS-STD-13715
SHEET 1 OF 2

GUIDEBOOK STANDARD #10

TEMPORARY OVERHEAD SERVICE POST INSTALLATION

(SEQUENCE # 047732) (08/00)

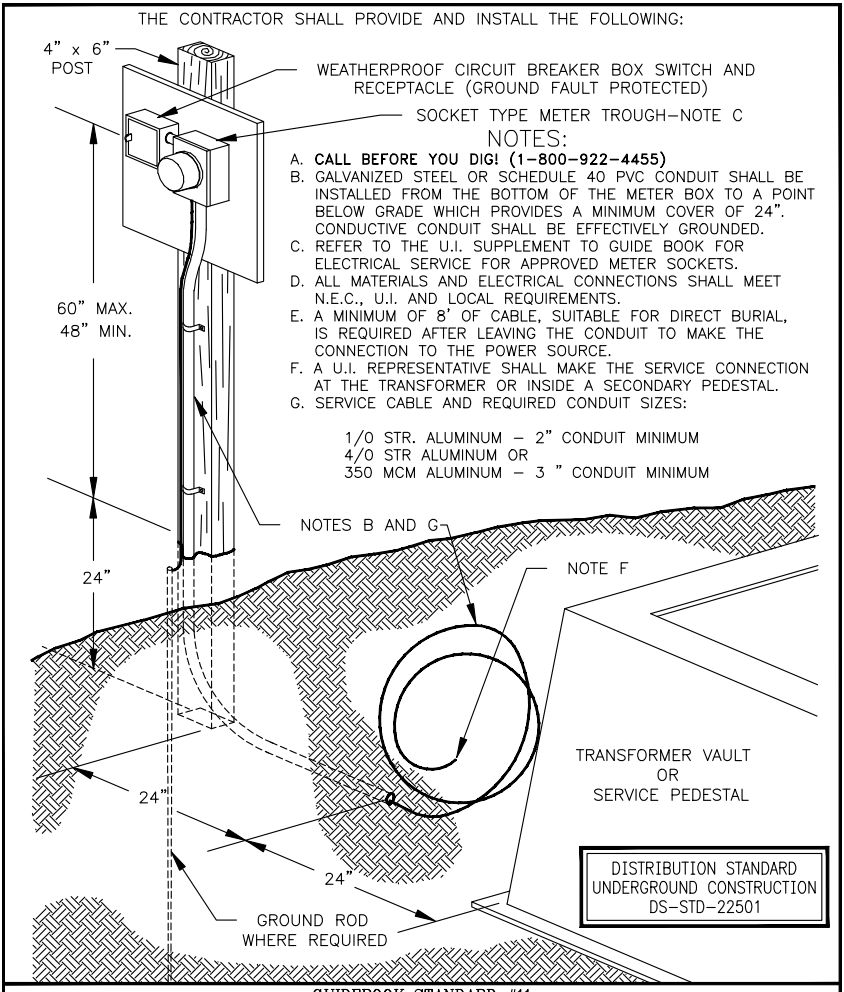

GUIDEBOOK STANDARD #11

TEMPORARY UNDERGROUND SERVICE

(SEQUENCE # 047736) (REVISED MEC 04/09/08)

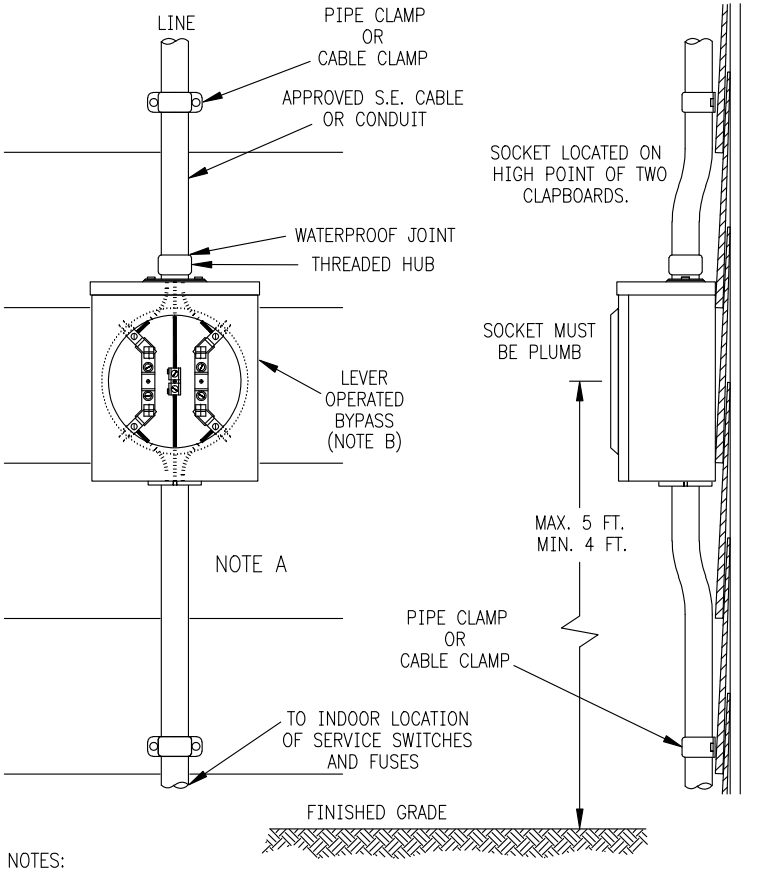

NOTES:

A. GROUNDING SHALL BE IN ACCORDANCE WITH N.E.C. AND OTHER APPLICABLE CODES.

B. BYPASS REQUIRED ON ALL COMMERCIAL AND MULTI-METER RESIDENTIAL SERVICES ONLY. BYPASS ON SINGLE FAMILY RESIDENTIAL SERVICES IS RECOMMENDED BUT IS OPTIONAL.

GUIDEBOOK STANDARD #12

TYPICAL OUTDOOR METER INSTALLATION
OVERHEAD 1 PHASE SERVICE
METER - SWITCH - FUSE SEQUENCE

(SEQUENCE # 047754) (03/02)

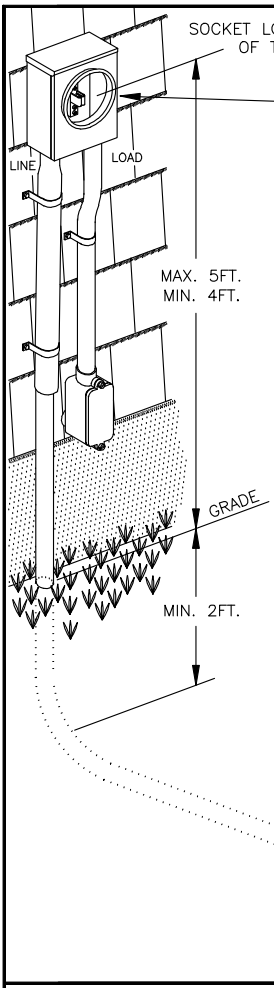

NOTES:

A. **CALL BEFORE YOU DIG! (1–800–922–4455)**

B. GALVANIZED STEEL OR SCHEDULE 40 PVC CONDUIT SHALL BE INSTALLED FROM THE BOTTOM OF THE METER SOCKET TO A POINT BELOW GRADE WHICH PROVIDES A MINIMUM COVER OF 24". CONDUCTIVE CONDUIT SHALL BE EFFECTIVELY GROUNDED.

C. THE ENTIRE METER PROVISION SHALL BE INSTALLED BEFORE THE SERVICE CABLE WILL BE INSTALLED. REFER TO THE U.I. GUIDEBOOK METERING SUPPLEMENT FOR APPROVED METER SOCKETS.

D. ALL MATERIALS AND ELECTRICAL CONNECTIONS SHALL MEET N.E.C., U.I. AND LOCAL REQUIREMENTS.

E. THE TRENCH BOTTOM SHALL BE UNDISTURBED OR WELL TAMPED EARTH, (I.E. NOT LOOSE BACKFILL), SUCH THAT THE TRENCH BOTTOM WILL NOT SETTLE AND CAUSE CABLE DAMAGE.

F. SLIP METER RISERS ARE REQUIRED FOR UNDERGROUND SERVICE ENTRANCE INSTALLATIONS AND SHALL BE SECURELY FASTENED TO THE BUILDING WITH TWO CLAMPS. SLIP METER RISERS COMPLIES WITH N.E.C. 300–5, WHICH REQUIRES GROUND MOVEMENT AND FROST PROTECTION FOR BURIED CABLES.

G. BYPASS REQUIRED ON ALL COMMERCIAL AND MULTI–METER RESIDENTIAL SERVICES ONLY. BYPASS ON SINGLE FAMILY RESIDENTIAL SERVICES IS RECOMMENDED BUT IS OPTIONAL.

DISTRIBUTION STANDARD
UNDERGROUND CONSTRUCTION
DS–STD–22503

GUIDEBOOK STANDARD #13

TYPICAL OUTDOOR METER INSTALLATION
UNDERGROUND 1 PHASE SERVICE
METER - SWITCH - FUSE SEQUENCE
SERVICE CABLE IN CONDUIT

(SEQUENCE # 047731) (03/02)

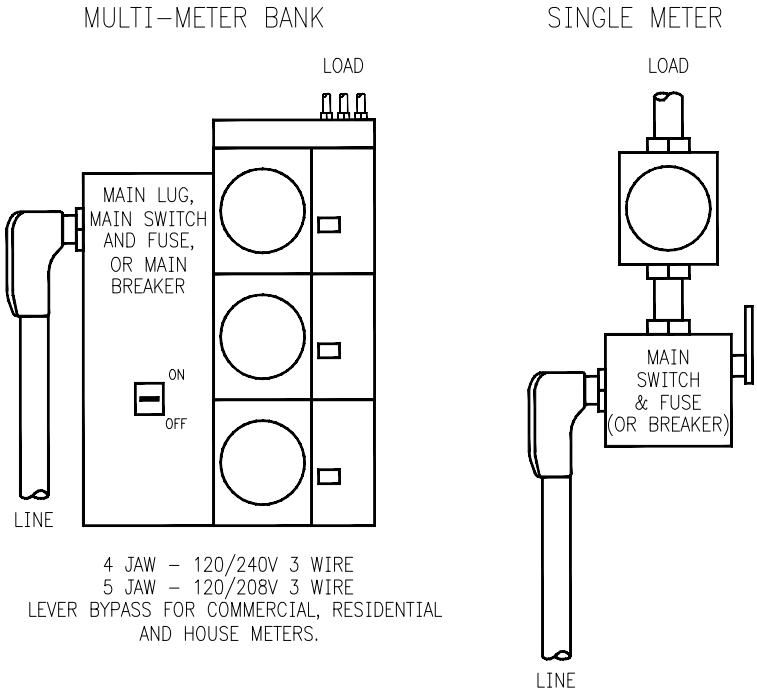

NOTES:

A. ALL METER(S) SHALL BE LOCATED OUTDOORS. IF A HARDSHIP EXISTS, PERMISSION MUST BE GRANTED IN WRITING BY U.I. TO INSTALL METERS INDOORS.

B. SUPPLIED, INSTALLED, OWNED, AND MAINTAINED BY CUSTOMER.

C. REFER TO GUIDEBOOK FOR INSTALLATION REQUIREMENTS.

D. REFER TO GUIDEBOOK SUPPLEMENT FOR APPROVED METERING EQUIPMENT.

GUIDEBOOK STANDARD #14

TYPICAL INDOOR METER INSTALLATIONS
1 PHASE 3 WIRE SELF CONTAINED
SWITCH - FUSE - METER SEQUENCE
INDIVIDUAL SERVICE RATINGS 200 AMP. MAX.

(SEQUENCE # 047755) (REVISED MEC 04/09/08)

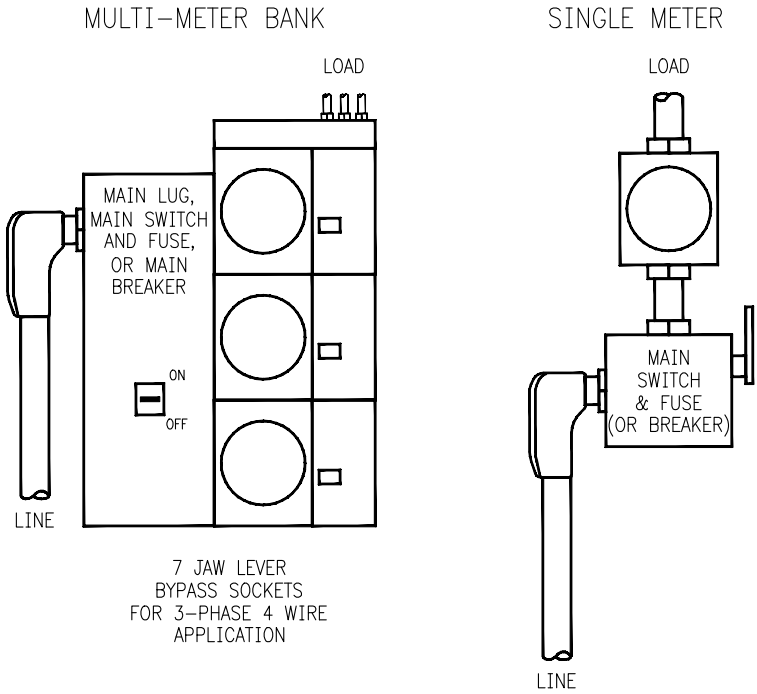

NOTES:

A. ALL METER(S) SHALL BE LOCATED OUTDOORS. IF A HARDSHIP EXISTS, PERMISSION MUST BE GRANTED IN WRITING BY U.I. TO INSTALL METERS INDOORS.

B. SUPPLIED, INSTALLED, OWNED, AND MAINTAINED BY CUSTOMER.

C. REFER TO GUIDEBOOK FOR INSTALLATION REQUIREMENTS.

D. REFER TO GUIDEBOOK SUPPLEMENT FOR APPROVED METERING EQUIPMENT.

GUIDEBOOK STANDARD #15

TYPICAL INDOOR METER INSTALLATIONS
3 PHASE 4 WIRE SELF CONTAINED
SWITCH - FUSE - METER SEQUENCE
INDIVIDUAL SERVICE RATINGS 200 AMP. MAX.

(SEQUENCE # 047756) (REVISED MEC 04/09/08)

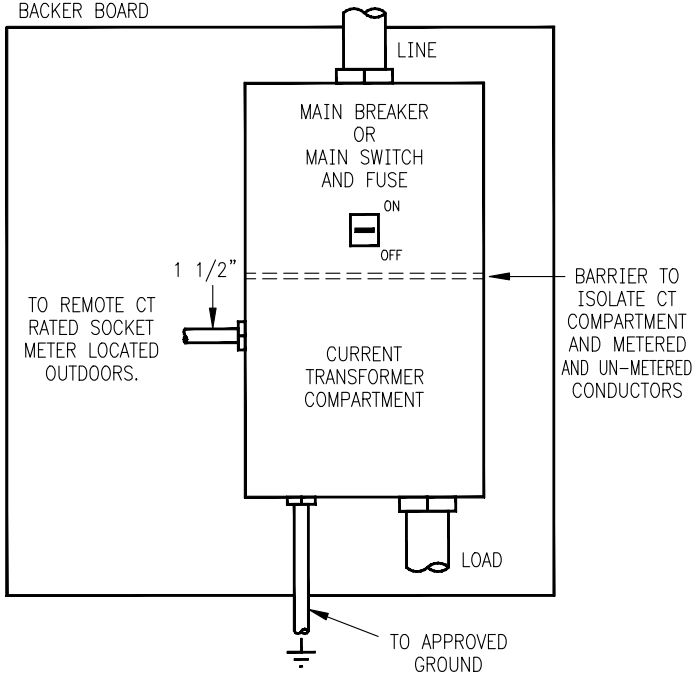

NOTES:

A. SUPPLIED, INSTALLED, OWNED, AND MAINTAINED BY CUSTOMER.

B. REFER TO GUIDEBOOK FOR INSTALLATION REQUIREMENTS.

C. REFER TO GUIDEBOOK SUPPLEMENT FOR APPROVED METERING EQUIPMENT.

D. CONSULT WITH METER SERVICE DEPT. BEFORE STARTING ANY JOB WHERE CURRENT TRANSFORMERS WILL BE USED.

E. CURRENT TRANSFORMER SECONDARY WIRING MUST BE PHYSICALLY ISOLATED FROM LINE SIDE AND LOAD SIDE CONDUCTORS WITHIN THE COMBINATION DEVICE BY MEANS OF A CONDUIT.

GUIDEBOOK STANDARD #16

TYPICAL CT RATED METER INSTALLATION
3 PHASE 4 WIRE SERVICE
SWITCH - FUSE - METER SEQUENCE
SERVICE RATING OVER 200 AMP.

(SEQUENCE # 047757) (11/93)

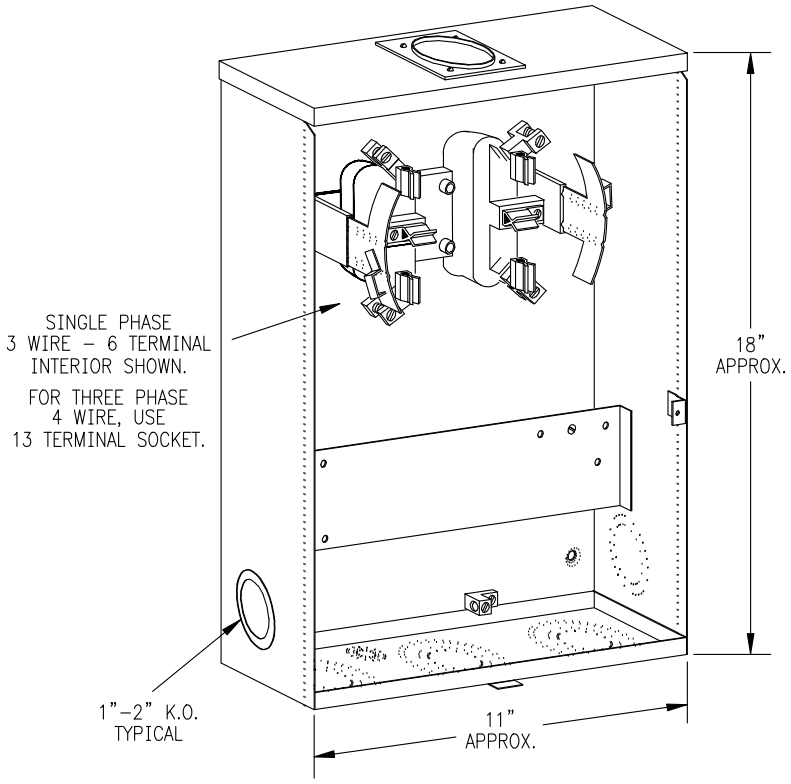

NOTES:

A. SUPPLIED AND INSTALLED BY CONTRACTOR.

B. REFER TO GUIDEBOOK SUPPLEMENT FOR APPROVED METERING EQUIPMENT.

GUIDEBOOK STANDARD #17

TYPICAL
SINGLE & THREE PHASE TRANSFORMER RATED
SOCKET WITH MOUNTING
PROVISION FOR TEST SWITCH

(SEQUENCE # 047760) (12/00)

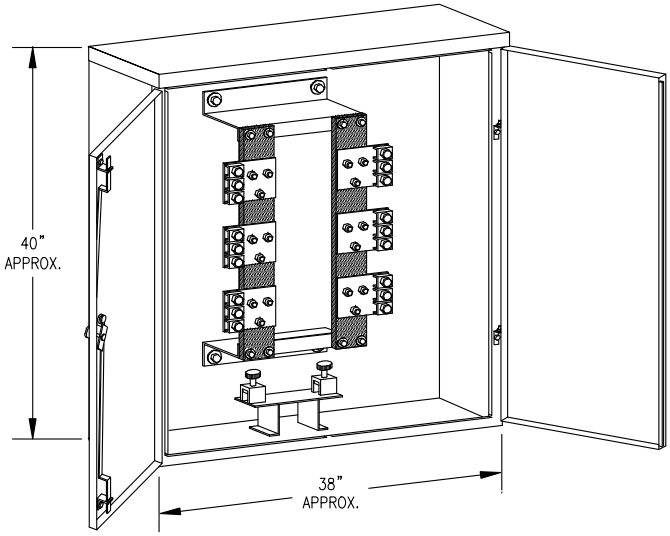

NOTES:

A. SUPPLIED AND INSTALLED BY CONTRACTOR.

B. REFER TO GUIDEBOOK SUPPLEMENT FOR APPROVED METERING EQUIPMENT.

C. CURRENT TRANSFORMER ENCLOSURES FOR 400–1200 AMPERE SERVICES RATED 480 VOLTS AND BELOW, THE CT ENCLOSURE MUST HAVE MOUNTING PLATES FOR BAR TYPE CURRENT TRANSFORMERS WITH 11 7/8" LONG PRIMARY BARS.

GUIDEBOOK STANDARD #18

TYPICAL
CURRENT TRANSFORMER CABINET
WITH CT RACK

(SEQUENCE # 047759) (12/00)

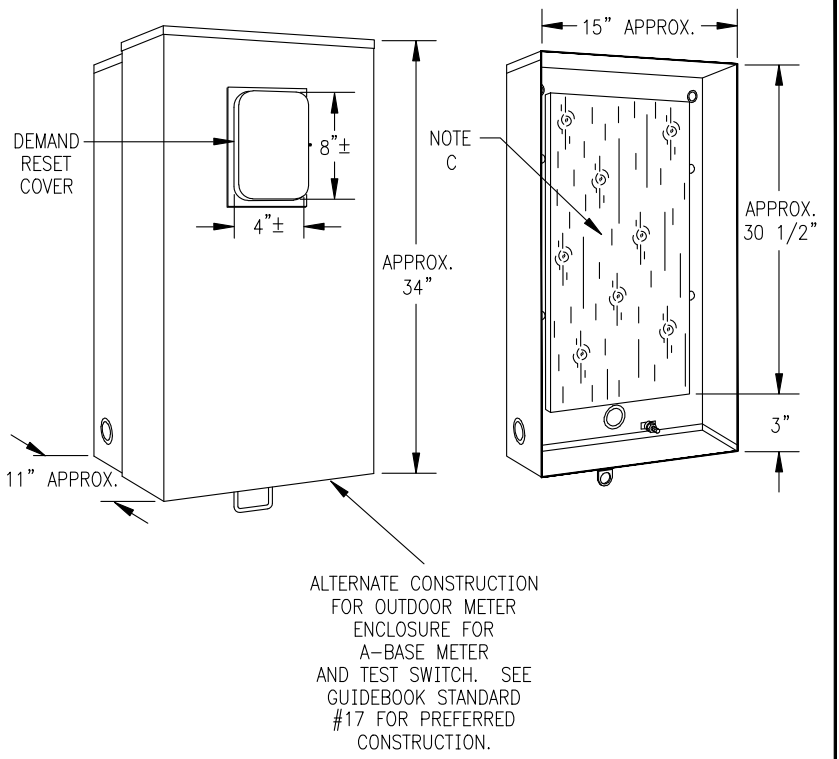

NOTES:

A. SUPPLIED AND INSTALLED BY CONTRACTOR.
B. REFER TO GUIDEBOOK SUPPLEMENT FOR APPROVED METERING EQUIPMENT.
C. BACKBOARD SPACE FOR METER AND TEST SWITCH.
D. TEST SWITCH SUPPLIED, INSTALLED AND WIRED BY U.I. COMPANY.
E. ENCLOSURE COVER MUST BE HINGED.

GUIDEBOOK STANDARD #19

TYPICAL METERING ENCLOSURES
FOR PRIMARY AND SECONDARY
TRANSFORMER RATED METER & TEST SWITCH

(SEQUENCE # 047758) (12/00)

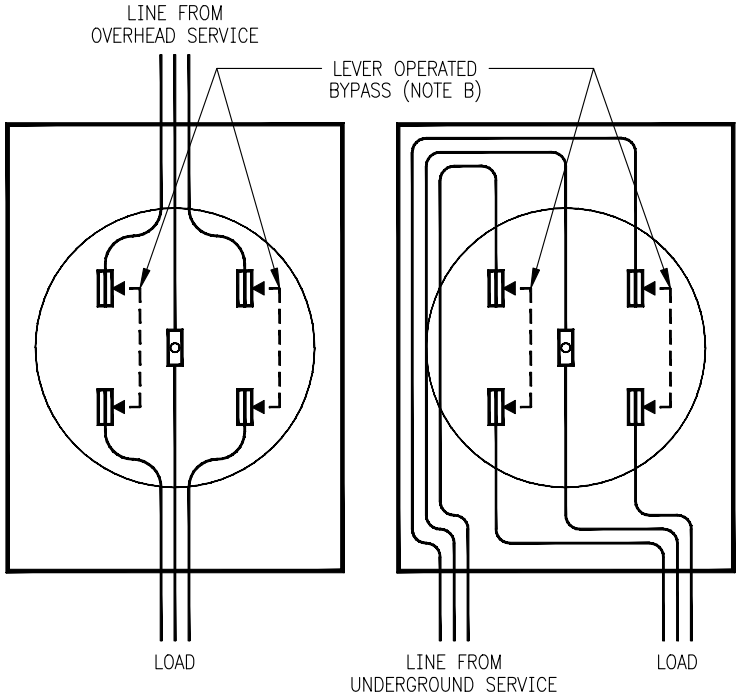

NOTES:

A. REFER TO GUIDEBOOK SUPPLEMENT FOR APPROVED METERING EQUIPMENT.

B. BYPASS REQUIRED ON ALL COMMERCIAL AND MULTI-METER RESIDENTIAL SERVICES ONLY. BYPASS ON SINGLE FAMILY RESIDENTIAL SERVICES IS RECOMMENDED BUT IS OPTIONAL.

GUIDEBOOK STANDARD #20

UP TO 320 AMP - 1 PHASE 3 WIRE
120/240V
4 TERMINAL METER SOCKET

(SEQUENCE # 047748) (REVISED MEC 04/10/08)

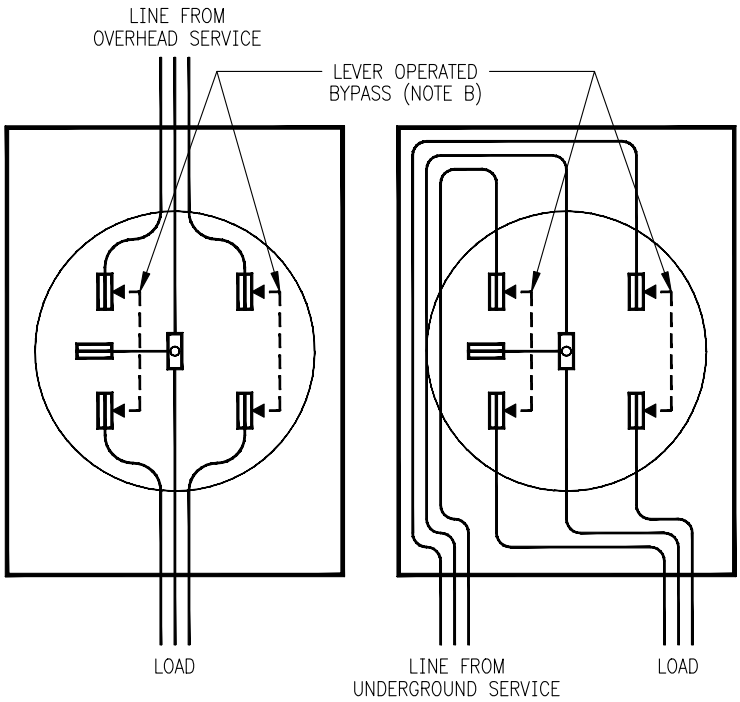

NOTES:

A. REFER TO GUIDEBOOK SUPPLEMENT FOR APPROVED METERING EQUIPMENT.

B. BYPASS REQUIRED ON ALL COMMERCIAL AND MULTI-METER RESIDENTIAL SERVICES ONLY. BYPASS ON SINGLE FAMILY RESIDENTIAL SERVICES IS RECOMMENDED BUT IS OPTIONAL.

GUIDEBOOK STANDARD #21

UP TO 200 AMP - 1 PHASE 3 WIRE
120/208V NETWORK
5 TERMINAL METER SOCKET

(SEQUENCE # 047750) (03/02)

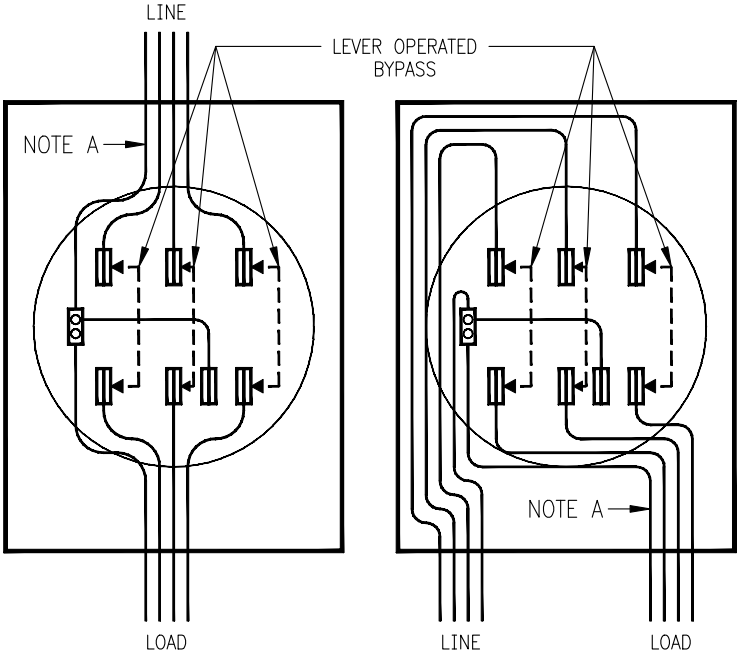

ALL 480Y/277V APPLICATION MUST BE COLD SEQUENCE. REFER TO GUIDEBOOK SECTION 10 METERING FOR ADDITIONAL REQUIREMENTS.

NOTES:

A. INSULATED GROUNDABLE NEUTRAL. THIS TERMINAL MUST BE CONNECTED AS FOLLOWS:
   - IF THE SEQUENCE IS METER-SWITCH-FUSE THEN BOND THIS NEUTRAL TO THE ENCLOSURE WITH THE STRAPS PROVIDED.
   - IF THE SEQUENCE IS SWITCH-FUSE-METER THEN THIS NEUTRAL MUST BE CONNECTED IN ACCORDANCE WITH N.E.C.

B. REFER TO GUIDEBOOK SUPPLEMENT FOR APPROVED METERING EQUIPMENT.

GUIDEBOOK STANDARD #22

UP TO 320 AMP - 3 PHASE 4 WIRE
208Y/120V OR 480Y/277V GROUNDED WYE
7 TERMINAL METER SOCKET

(SEQUENCE # 047751) (REVISED MEC 04/10/08)

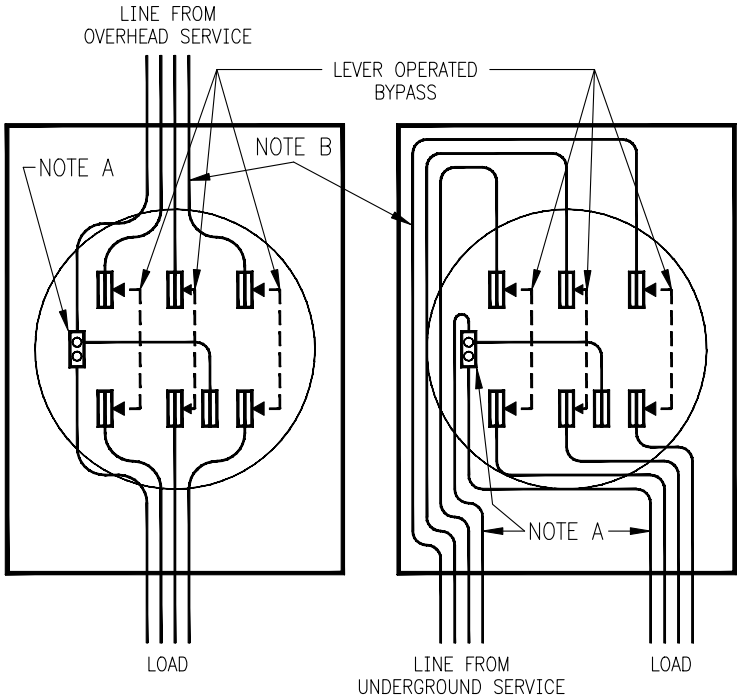

NOTES:

A. INSULATED GROUNDABLE NEUTRAL. THIS TERMINAL MUST BE CONNECTED AS FOLLOWS
   - IF THE SEQUENCE IS METER-SWITCH-FUSE THEN BOND THIS NEUTRAL TO THE ENCLOSURE WITH THE STRAPS PROVIDED.
   - IF THE SEQUENCE IS SWITCH-FUSE-METER THEN THIS NEUTRAL MUST BE CONNECTED IN ACCORDANCE WITH N.E.C..

B. LINE AND LOAD SERVICE ENTRANCE CONDUCTOR HAVING THE HIGHER VOLTAGE TO NEUTRAL (APPROX. 208V) SHALL BE ON THE RIGHT AND IDENTIFIED BY ORANGE COLORED CONDUCTOR.

C. REFER TO GUIDEBOOK SUPPLEMENT FOR APPROVED METERING EQUIPMENT.

GUIDEBOOK STANDARD #23

UP TO 320 AMP - 3 PHASE 4 WIRE
120/240/240V DELTA
7 TERMINAL METER SOCKET

(SEQUENCE # 047753) (REVISED MEC 04/10/08)

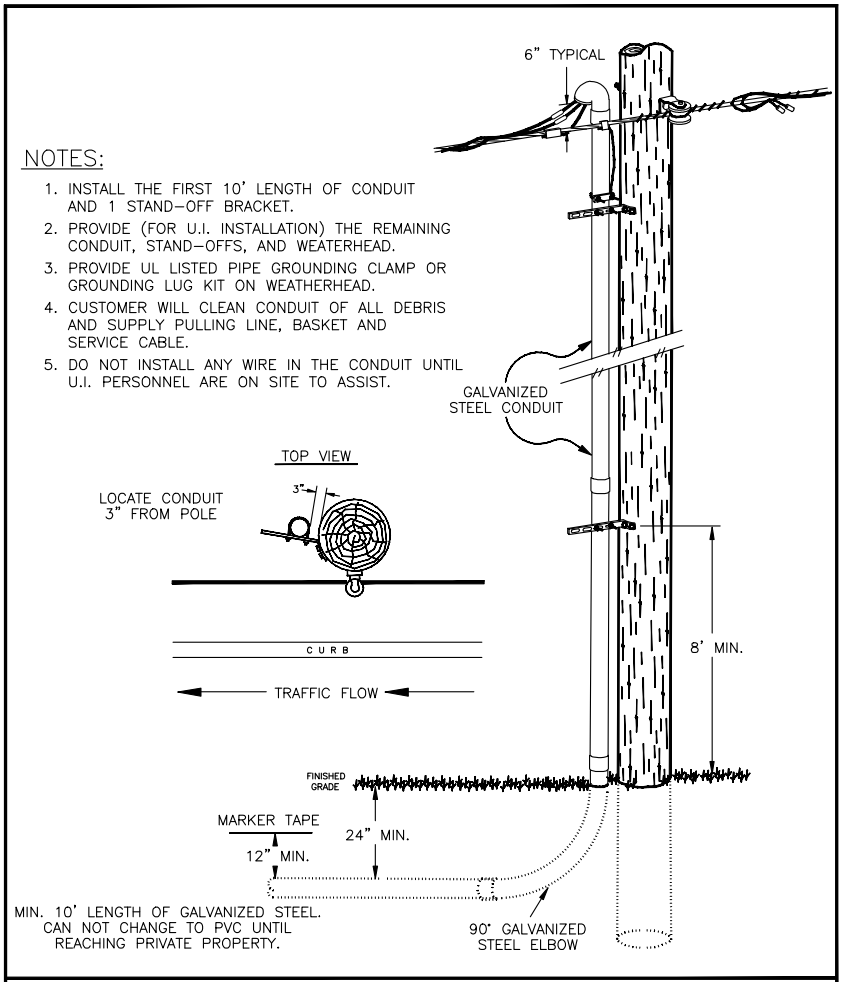

GUIDEBOOK STANDARD #24

UNDERGROUND SERVICES FROM WOOD POLES

(SEQUENCE # 061138) (REVISED MEC 04/09/08)

PADMOUNTED TRANSFORMER

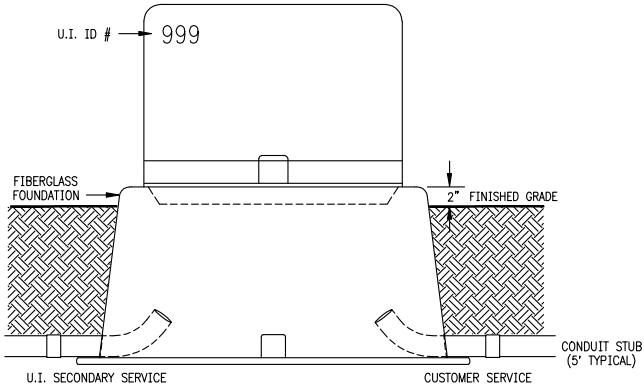

SECONDARY PEDESTAL (HAND HOLE)

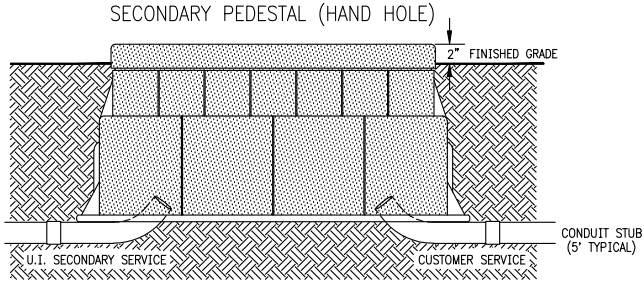

NOTES:

1. LOCATE THE CONDUIT STUB WHICH TYPICALLY EXTENDS 5' FROM BOX.
2. IF NO STUB IS AVAILABLE, CONTACT U.I. CUSTOMER ENGINEERING FOR ASSISTANCE.
3. DO NOT ATTEMP TO INSTALL CONDUIT INTO TRANSFORMER OR HAND HOLE.
4. CUSTOMER MUST CLEAN CONDUIT OF ALL DEBRIS AND SUPPLY PULLING LINE AND BASKET.
5. DO NOT INSTALL ANY WIRE IN THE CONDUIT UNTILL U.I. PERSONNEL ARE ON SITE TO ASSIST.

TYPICAL CUSTOMER SERVICE TRENCH

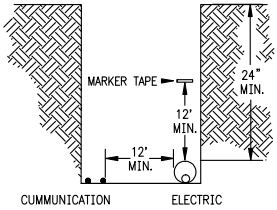

GUIDEBOOK STANDARD #25

UNDERGROUND SERVICES FROM TRANSFORMERS OR HAND HOLES

(SEQUENCE # 061139) (12/00)

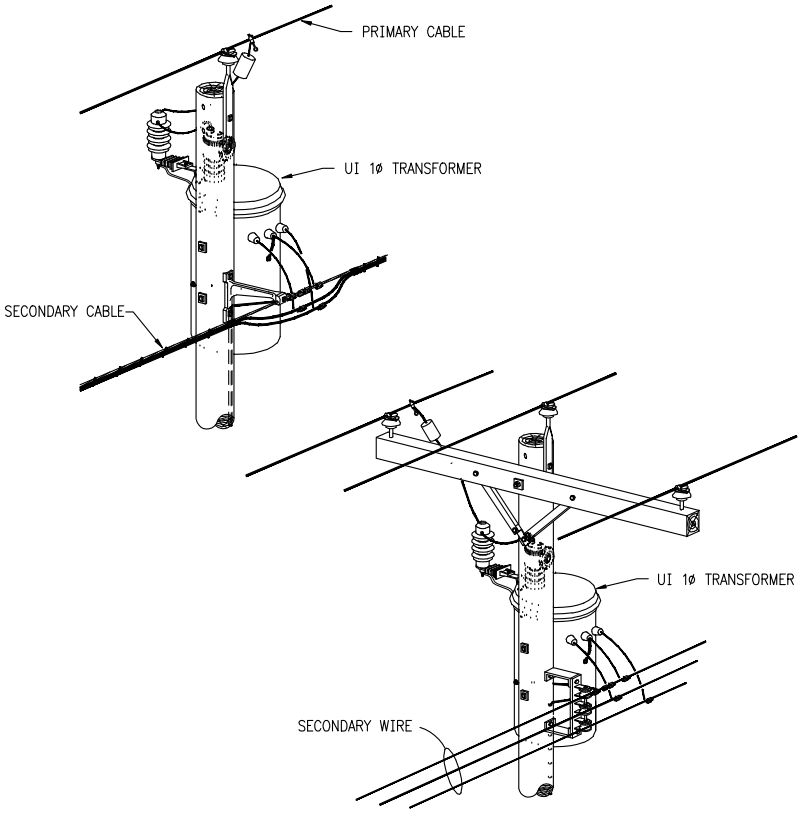

GUIDEBOOK STANDARD #26

SINGLE PHASE TRANSFORMER INSTALLATION

(SEQUENCE # 058350) (2/97)

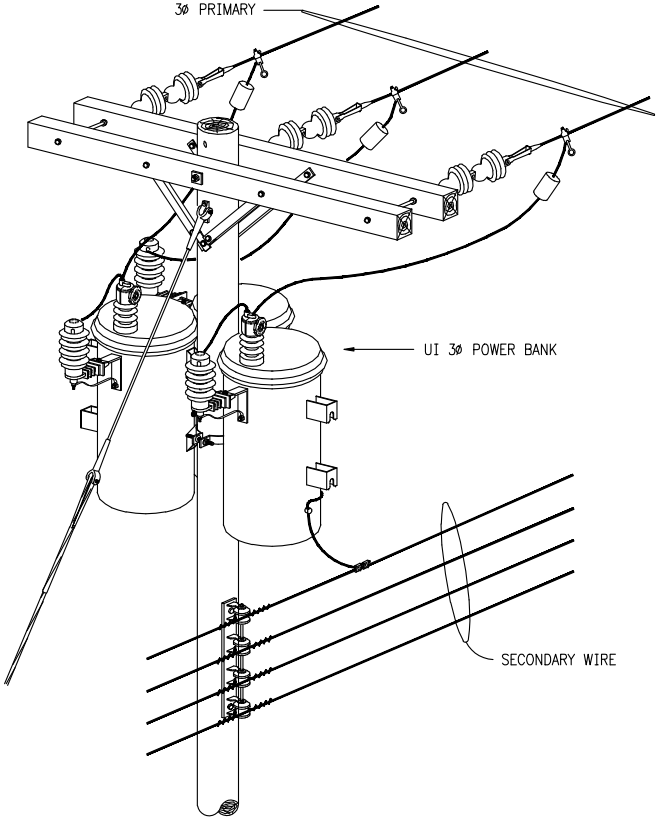

GUIDEBOOK STANDARD #27

THREE PHASE
TRANSFORMER
INSTALLATION

(SEQUENCE # 058351) (2/97)

APPENDIX A:

APPROVED METERING EQUIPMENT

2008

APPENDIX A:

APPROVED METERING EQUIPMENT

TABLE OF CONTENTS

Approved Metering Equipment

- A list of metering equipment approved by the Company is shown on the following pages of this Supplement.
- This equipment is also subject to the approval of the Municipal Electrical Inspector having jurisdiction.
- This list of equipment is subject to revision from time to time.
- Information on the latest revisions is available from the Company.
- All metering equipment contained in this list is to be furnished and installed by the contractor unless specified otherwise by the Company.
- Approved mounting details and dimensions are shown on Company standard drawings.
- Unusual conditions which are not covered should be referred to the Company for approval.
- Custom built meter centers, modular meter panels, and switchgear with instrument transformer enclosures must be approved by UI prior to fabrication.

General Requirements

- Ringless, socket type meter receptacles are to be used for all new and revamped installations, both self-contained and transformer-rated.
- All meter sockets must have a U.L. label
- Basic catalog numbers may have different or additional prefix or suffix numbers or letters indicating variations in hubs, sealing rings, connectors, etc.
- Horizontal gang sockets must have either center or side wireway.
- Each meter position must have its own individual cover.
- Each ringless type cover and each line side main switch or panel cover must be padlockable.
- On sockets with lever operated bypass, each ringless type cover must have a 7/16 inch knockout for a standard barrel lock located to align with an Inner-Tite E-1020 (or equivalent) lock receiver.
- Circuit breaker/disconnect and socket combinations must have provisions for sealing each circuit breaker/disconnect in the off position (non-metallic circuit breaker covers are recommended).
- UI reserves the right to modify sockets or enclosures to add protective, locking, or other devices.
- 3 phase 4-wire self-contained group metering must have barriers between meter positions.
- All 320 amp, 277/480 volt metering, as well as 120/208 volt metering fed by a downtown network grid, must be cold sequence. That is, there must be a main fused disconnect or circuit breaker ahead of the meter socket. Consult UI for information regarding the location of the network grids.

Height of Meters

- In group metering stacks, the maximum center line height of the top meter shall be 72 inches; the minimum center line height of the bottom meter shall be 24 inches indoor (36 inches preferred) or 36 inches outdoor.

Group Metering

- Group Metering Modular Stacks, other than those listed in the following pages, may be approved if a drawing and /or a sample is submitted to the Company for approval prior to the start of construction. In general, the requirements are Underwriter's Laboratory Listing, ringless sockets, and individual lockable covers. Manual lever bypass is required for all residential and commercial customers. All 200 and 320 amp sockets must have jaw release bypass.

5th Terminal Requirements

- On all 3 wire, 120/208 volt sockets of either the single or multiple meter type, the 5th terminal must be mounted at the left side (9 o'clock) position.

Manual Bypass Requirements

- The only bypass permitted is manual lever operated type. Horn type, sliding type, and automatic bypasses are not permitted.
- Single phase, single unit residential installations may utilize meter sockets up to 200 amps with or without a bypass; 100 amp sockets may utilize a lever bypass with non locking jaws.
- Single phase commercial, multi-unit residential, and house meter sockets up to 100 amps shall have a manual lever type bypass with non-locking jaws.
- All 200 amp sockets utilizing a bypass as well as all 320 amp meter sockets shall have a manual lever bypass with locking jaws.
- When in the bypassed position, the operating lever shall prevent the cover from being replaced.
- A safety flash shield is required on all meter positions that have a lever operated bypass.
- Exceptions to bypass requirements must be approved in writing by the Company.

Instrument Transformer Enclosures

- A neutral bus connection must be available in instrument transformer enclosures.
- Covers on stand alone instrument transformer enclosures (i.e. not part of a meter center or switchgear) must be hinged.
- Separate, lift off covers are not acceptable on stand alone instrument transformer enclosures without written approval of the Company.
- All instrument transformer enclosures must be padlockable.
- Instrument transformer compartments within a combination service entrance main switch and utility metering cabinet must have inner walls or barriers to isolate metered from unmetered conductors.
- Current transformer enclosures for 800-1200 ampere, 600 volt services must have mounting plates for bar type CT's with 11-7/8 inch long primary bars.
- Current transformer enclosures for above 1200 ampere, 600 volt services must have removable bolt-in bars with shelves attached to support window type CT's (brackets suitable for securing window type CT's with a mounting base attached are also acceptable but not preferred).

Single Phase–Residential–100 Ampere–No Bypass

3-Wire 120/240 Volt

Manufacturer	No. of Positions	Type of Service	Ringless
Cooper B-Line	1	OH/UG	EN12L43GRST
	1	OH/UG	ENCB10L24A3GRST*
Durham/	1	OH/UG	UT-RS101B
Square D/	1	OH/UG	UT-RS101L
Cutler Hammer / Midwest Electric (See note below)	1	OH	UP120N0B*
L&G/(Siemens)	1	OH/UG	(S)UAT111-0MXA
	1	OH/UG	MC1224MB1125R*
Milbank	1	OH/UG	U7487-RL-TG
	1	OH	U7487-YL-TG
	1	UG	U7487-O-TG
	1	OH/UG	U3499-XL*
Murray*	1	OH/UG	RJ103AC
	1	OH/UG	RJ103AX
	1	UG	RN102A

* Combination meter socket and disconnect device.*

Note: add the following suffix designations to Catalog Number – Cutler Hammer (CH), Midwest Electric (MEP), Square D (SQD)

Single Phase–Residential–200 Ampere–No Bypass

3-Wire 120/240 Volt

Manufacturer	No. of Positions	Type of Service	Ringless
Cooper B-Line	1	OH/UG	EN20L43GRST
	1	OH/UG	ENCB20L24A3GRST*
Durham/	1	OH	UT-RS202B
Square D/	1	OH	UT-RS202N
Cutler Hammer/	1	OH/UG	UT-RS213B
Midwest Electric	1	OH/UG	UT-RS213C
(See note below)	1	OH	UC222N1B*
	1	OH/UG	UC222W1B*
L&G/(Siemens)	1	OH	(S)UAT317-0MXA
	1	UG	(S)UAT517-PDG
	1	OH/UG	MC0816B1200RT*
Milbank	1	OH	U7021-RL-TG
	1	UG	U7040-O-TG
	1	OH/UG	U7040-XL-TG
	1	UG	U1980-O
	1	OH/UG	U3990-XL-200*
	1	UG	U3798-O-200*
Murray	1	OH	RS103AX
	1	OH/UG	RS109AR
	1	UG	RS109A
	1	UG	RL109A

* Combination meter socket and disconnect device.

Note: add the following suffix designations to Catalog Number – Cutler Hammer (CH), Midwest Electric (MEP), Square D (SQD)

Single Phase – Commercial, Residential, and House Meter Application– 100 Ampere Lever Operated Bypass & Flash Shield

3-Wire 120/240 Volt or 3-Wire 120/208 Volt

5th Terminal at 9 O'clock Position

Manufacturer	No. of Positions	Type of Service	Ringless	5th Terminal 3W 120/208 V.
Cooper B-Line	1	OH	EC12L14GR1N	Inc.
	2-4	OH/UG	HEC1043(2-4)CGR1N	Inc.
Durham/ Square D/ Cutler Hammer/ Midwest Electric (See note below)	1	OH	UBT-C4213B	NA
Milbank	1	OH	U2272-RL-5T9-BL	Inc.
	1	OH/UG	U3741-XL-100-BL*	K3866
	2-6	OH/UG	U275(2-6)-X-5T9	Inc.

* Combination meter socket and disconnect device.

Note: some suppliers do not offer 100 amp sockets for this application. 200 amp sockets may be used on 100 amp services if desired.

Note: add the following suffix designations to Catalog Number – Cutler Hammer (CH), Midwest Electric (MEP), Square D (SQD)

Single Phase—Commercial, Residential, and House Meter Application—200 Ampere Jaw Release Lever Operated Bypass & Flash Shield

3-Wire 120/240 Volt or 3-Wire 120/208 Volt

5th Terminal at 9 O'clock Position

Manufacturer	No. of Positions	Type of Service	Ringless	5th Terminal 3W 120/208 V.
Cooper B-Line	1	OH	EL20L41GR1N	Inc.
	1	OH/UG	EL20L45GR1N	Inc.
	1	OH/UG	ELCB20L24A5GR1N*	NA
	2-4	OH/UG	HEL2043(2-4)CGR1N	Inc.
	2-3	OH/UG	VELMP2043(2-3)LGRST5K9*	Inc.
	4-6	OH/UG	VELMP2043(4-6)CGRST5K9*	Inc.
Durham/	1	OH	UBT-H4203B	ARP00035
Square D/	1	OH/UG	UBT-H4213B	ARP00035
Cutler Hammer/	1	OH	UBGT-U4203B	Inc.
Midwest Electric	1	OH	UBGT-H4213B	Inc.
(See note below)	1	UG	1007994A	NA
	1	UG	1007995A	Inc.
	2-3	OH/UG	UBT-(2-3)H42353U	ARP00035
	4-6	OH/UG	UBT(4-6)H42393UU	ARP00035
	2-3	OH/UG	UBGT-(2-3)H52353U	Inc.
	4-6	OH/UG	UBGT-(4-6)H52393UU	Inc.
L&G/(Siemens)	1	OH	(S)40405-0BNU	Inc.
	1	OH/UG	(S)48805-0BNU	Inc.
	1	OH/UG	MM0202L1200RLJC*	Inc.

* Combination meter socket and disconnect device.

Note: add the following suffix designations to Catalog Number – Cutler Hammer (CH), Midwest Electric (MEP), Square D (SQD)

Single Phase – Commercial, Residential, and House Meter Application– 200 Ampere Jaw Release Lever Operated Bypass & Flash Shield

3-Wire 120/240 Volt or 3-Wire 120/208 Volt

5th Terminal at 9 O'clock Position

Manufacturer	No. of Positions	Type of Service	Ringless	5th Terminal 3W 120/208 V.
Milbank	1	OH/UG	U3791N-RXL-200-BL*	K3866
	1	OH	U9800-RRL-QG-BL	K3866
	1	UG	U4721-O-BL	K3866
	1	UG	U4322-O-BL**	NA
	2-6	OH/UG	U287(2-6)-XT-5T9	Inc.
	2-6	OH/UG	U437(2-6)-XT-5T9*	Inc.
Murray	1	OH/UG	RH173CRJNU	Inc.
	1	OH/UG	RH178CRJNU	Inc
Square D	2	OH/UG	MPL32200*	Inc.
	3	OH/UG	MPL43200*	Inc.
	4	OH/UG	MPL64200*	Inc.

* Combination meter socket and disconnect device.

** Meter Pedestal, 120/240 volt only

Single Phase—Residential and Commercial—320 Ampere Continuous Lever Bypass Required

3-Wire 120/240 Volt

Manufacturer	No. of Positions	Type of Service	Ringless
Cooper B-Line	1	OH/UG	EL32T45GR1N
Durham/	1	OH	UTH4300T
Square D/	1	OH	UTH4309T
Cutler Hammer/ Midwest Electric (See note below)	1	OH/UG	1008068
L&G/(Siemens)	1	OH/UG	(S)47704-01NU
	1	OH/UG	(S)47705-01NU
	1	OH/UG	(S)9804-9144
	1	OH/UG	(S)9804-9146
	1	OH/UG	MM0404L1400RLM*
Milbank	1	OH/UG	U4778-X-BL
	1	UG	U4835-X-2/200-BL*
Murray	1	OH/UG	RK173AHJNU
	1	OH/UG	RK178AHJNU
	1	OH/UG	JC0404L1400RLM*
	1	OH/UG	JA0816B1400RLTM*

* Combination meter socket and disconnect device.

Note: add the following suffix designations to Catalog Number – Cutler Hammer (CH), Midwest Electric (MEP), Square D (SQD)

Three Phase–
Commercial–
200 Ampere
(must be used on 100 Ampere service also)
Jaw Release
Lever Operated
Bypass &
Flash Shield

Manufacturer	No. of Positions	Type of Service	Four Wire– Three Phase 7 Terminal
Cooper B-Line	1	OH	EL20L71GR1N
	1	OH/UG	EL20L75GR1N
	1	OH/UG	ELCB20L27A5GR1N
Durham/	1	OH	UT-H7203(B) or (T)
Square D/	1	OH/UG	UT-H7213(B) or (T)
Cutler Hammer/ Midwest Electric (See note below)	1	UG	1007996A
L&G/(Siemens)	1	OH/UG	(S)40407-01NU
	1	OH/UG	(S)48807-01NU
	1	OH/UG	MM0303B3200RLC *
Milbank	1	OH/UG	U3781-RXL-200-BL *
	1	OH	U9700-RRL-QG-BL
	1	UG	U4910-O-BL
	2-6	OH/UG	U273(2-6)-XT
Murray	1	OH/UG	RH173GRJNU
	1	OH/UG	RH178GRJNU

* Combination meter socket and disconnect device.

Note: add the following suffix designations to Catalog Number – Cutler Hammer (CH), Midwest Electric (MEP), Square D (SQD)

Three Phase– Commercial– 320 Ampere Jaw Release Lever Operated Bypass & Flash Shield

Manufacturer	No. of Positions	Type of Service	Four Wire– Three Phase 7 Terminal
Cooper B-Line	1	OH/UG	EL32T75GR1N
Durham/	1	OH	UBT-H7300T
Square D/ Cutler Hammer/ Midwest Electric (See note below)	1	UG	1008069
L&G/(Siemens)	1	OH/UG	(S)9804-9145
	1	OH/UG	(S)9804-9147
Milbank	1	OH/UG	U4911-X-BL
	1	OH/UG	U3781N-RXL-200-BL*
Murray	1	OH/UG	RH173GHJNU
	1	OH/UG	RH178GHJNU

* Combination meter socket and disconnect device.

Note: add the following suffix designations to Catalog Number – Cutler Hammer (CH), Midwest Electric (MEP), Square D (SQD)

Current Transformer Cabinet With CT Rack

Manufacturer	Catalog No.	Dimensions	Ampere
Cooper B-Line	363612DDHRTCT1N	36”W x 36”H x 12”D	400 – 800
	484814DDHRTCT1N	48”W x 48”H x 14”D	800 – 1200
East Coast Power Systems	CTN-800R	36”W x 36”H x 12”D	400 – 800
	CTN-1200R	48”W x 50”H x 12”D	800 - 1200
Milbank	S-1855-O	36"W x 36"H x 10"D	400 - 800
	S-1856-O	48"W x 48"H x 10"D	800 - 1200

Transformer Rated Socket With Mounting Provision for Test Switch

Manufacturer	No. of Positions	Type of Service	6 Terminal Single Phase 3-Wire Ringless	13 Terminal Three Phase 4-Wire Ringless
Cooper B-Line	1	OH/UG	SP02063N1GRST	SP02133N1GRST
L&G /Siemens	1	OH/UG	L9837-8203	L9837-8503
Milbank	1	OH/UG	UC7532-XL	UC7449-XL

Meter Enclosure with Demand Reset Cover For Transformer Rated Meters and Test Switches Outdoor Type

(by written permission only)

Manufacturer	No. of Positions	1 or 3 Phase	Catalog No.	Dimensions
Milbank	1	1	S9996-FB-XL-C	15"W x 30"H x 11"D
	1	3	S2718-FB-XL-C	15"W x 34"H x 14"D
	2	3	S3390-FB-XL-C	28"W x 34"H x 11"D

GROUP METERING

Single Phase Residential and Commercial Meter Gangs—200 Ampere

3 Wire 120/240 Volt or 3 Wire 120/208 Volt

(Jaw release lever operated bypass required)

Manufacturer	Ringless
Cutler Hammer	35MM120R-12*
	35MM220R-12*
	35MM320R-12*
	35MM420R-12*
G E Meter Mod III	TMPR12122R
	TMPR12222R
	TMPR12322R
	TMPR12422R
Murray	DL135W4
	DL235W4
	DL335W4
	DL435W4
	DL145W5 *
	DL245W5 *
	DL345W5 *
	DL445W5

* Not suitable for use on 3-phase, 4-wire, Delta incoming services

GROUP METERING

Single Phase Residential and Commercial Meter Gangs–200 Ampere

3 Wire 120/240 Volt or 3 Wire 120/208 Volt

(Jaw release lever operated bypass required)

Manufacturer	Ringless
Siemens	W1MM1225U
	W1MM2225U
	W1MM3225U
	W1MM4225U
	W2MM1225U*
	W2MM2AB225U*
	W2MM2BC225U*
	W2MM2CA225U*
	W2MM3225U*
	W2MM4AB225U*
	W2MM4BC225U*
	W2MM4CA225U*
	SP4(2-6)12RJL (1 PHASE THREE WIRE ONLY)
Square D	EZML312200**
	EZML313200**
	EZML314200

* Not suitable for use on 3-phase, 4-wire, Delta incoming services

** When fed by 3-phase, 4-wire, Delta incoming service, add suffix designation: CA

GROUP METERING

Three Phase Four Wire Delta or Wye Gang Sockets– 200 Ampere

(Jaw release lever operated bypass required)

Manufacturer	Ringless
Cutler Hammer	37MM120R-12
	37MM220R-12
	37MM320R-12
	37MM420R-12
G E Meter MOD III	TMPR312122R
	TMPR312222R
	TMPR312322R
	TMPR312422R
Murray	DL142W7
	DL242W7
	DL342W7
	DL442W7
Siemens	W3MM1200U
	W3MM2200U
	W3MM3200U
	W3MM4200U
Square D	EZML331200
	EZML332200
	EZML333200
	EZML334200

COMBINATION CURRENT TRANSFORMER CABINET and SERVICE ENTRANCE SWITCH OR CIRCUIT BREAKER

Services Up to 1200 Amperes

Manufacturer	Switch	Breaker
Cutler Hammer	WSM	WBM
East Coast Power Systems	MSCT	MBCT
General Electric	FSE	SE
Murray	FSCT	CBCT
Siemens	SCT	BCT
Square D	–	CTC

Other Manufacturers' combination devices may be approved if a drawing or a catalog specification sheet is submitted to the Company for approval prior to the start of construction. General requirements are Switch-Fuse-Meter (Cold) Sequence, Underwriter's Laboratory listing, main switch lockable in the off position, a separate lockable current transformer compartment having inner walls or barriers to isolate metered from unmetered conductors, and mounting plates which will accept bar type current transformers, with 11 7/8" long primary bars.

Services Above 1200 Amperes

Please consult the Company. In general, combination devices of the Manufacturers' types listed above would be approved; however, a drawing or catalog specification sheet must be submitted to provide for mounting of the proper current transformers, which will be specified by the Company. Switch-Fuse-Meter (Cold) Sequence, Underwriter's Laboratory Listing, main switch lockable in the off position, and a separate lockable current transformer compartment having inner walls or barriers to isolate metered from unmetered conductors, are also required. Current transformer cabinet must have removable bolt-in bars with shelves attached to support window CTs (brackets suitable for securing window type CTs with a mounting base attached are also acceptable but not preferred).

Appendix B: **Map of UI Service Territory**

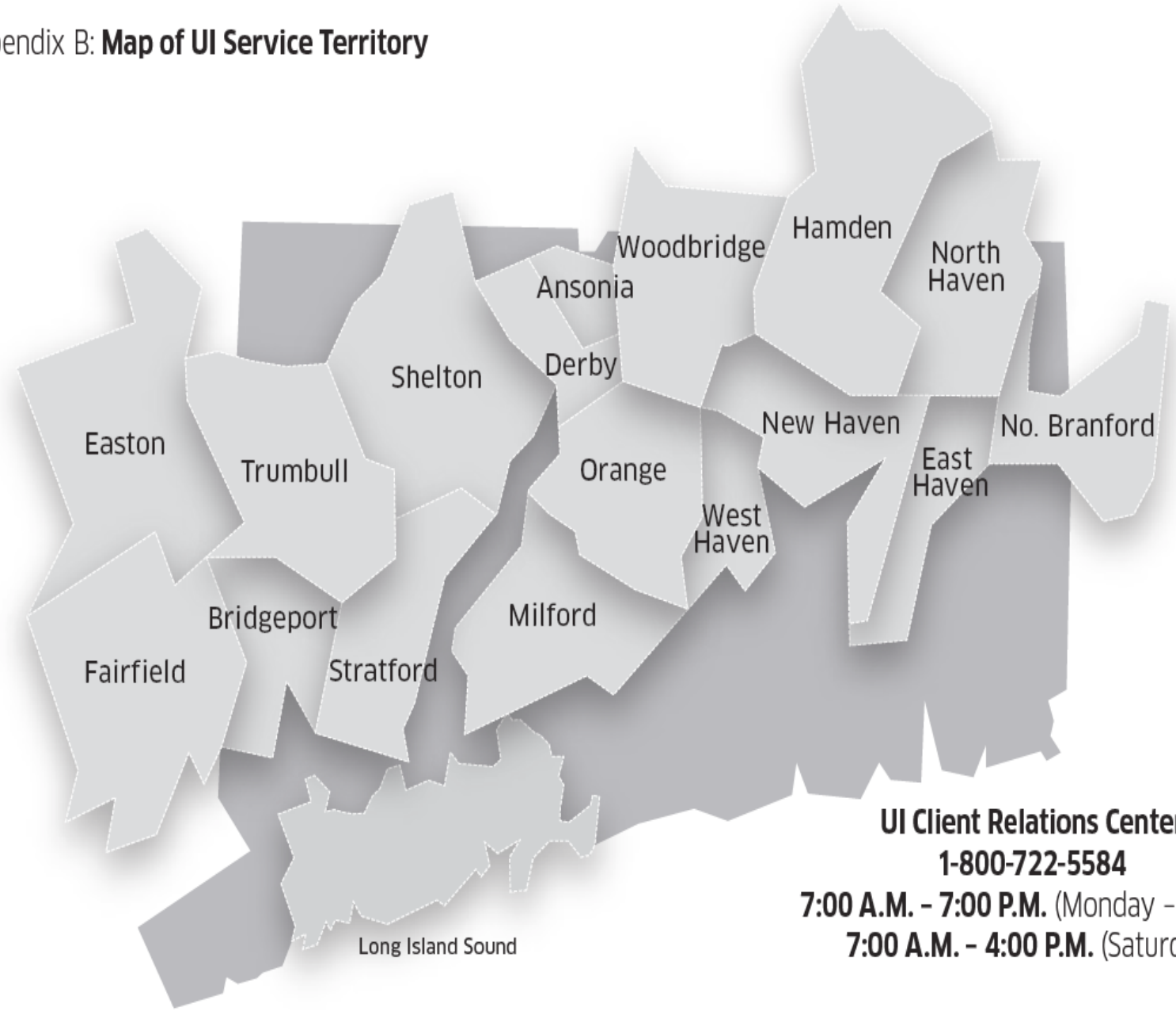

UI Client Relations Center
1-800-722-5584
7:00 A.M. – 7:00 P.M. (Monday – Friday)
7:00 A.M. – 4:00 P.M. (Saturday)